MISSION-CRITICAL
INTERCONNECT
SOLUTIONS

Glenair®

"BETTER THAN QPL"

SuperNine D38999 Series IV Connectors and Cables

DLA-Qualified and Glenair Signature MIL-DTL-38999 Series IV Environmental and Hermetic Breech-Lock Interonnects

MARCH 2025

MIL-AERO/
DEFENSE
INTERCONNECT
SOLUTIONS

SuperNine®

The advanced-performance MIL-DTL-38999 Series IV breech-lock connector

From vertical launch fire-control, tracking, and multi-target missile systems to rugged industrial applications, Glenair "Better-than-QPL" SuperNine and DLA-qualified D38999 Series IV connectors are the ultimate solution for positive and reliable breech-locking performance.

- **QPL manufacturer of MIL-DTL-38999 Series IV Class F, W and G connectors**
- **"Better-than-QPL" SuperNine Series IV offers advanced performance and features beyond the Mil-spec**
- **Optimized for SWAMP area applications**
- **Quick-disconnect 90° breech coupling mechanism**
- **Visual, audible and tactile full-mate indicators**
- **Integrated EMI grounding fingers**
- **-65°C to 200°C operating temperature range**

© 2025 Glenair, Inc • 1211 Air Way, Glendale, CA 91201 • 818-247-6000 • www.glenair.com • U.S. CAGE code 06324

"BETTER-THAN QPL" BREECH-LOCK D38999 SERIES IV

SuperNine and MIL-DTL-38999 Series IV Environmental

Anti-decoupling, vibration and shock resistant DLA qualified and Glenair SuperNine derivatives

SUPERNINE SERIES IV "BETTER-THAN-QPL" FEATURES AND BENEFITS

- Secure breech-lock mating connector meets D38999 shock and vibe
- Integral banding porch eliminates need for back-end accessories
- Improved plug ground fingers deliver outstanding EMI performance—equal to D38999 Series III
- Glenair Signature Tin-Zinc finish class is RoHS compliant and cadmium compatible
- Precision-machined key/keyway polarization for reliable mismating protection
- Scoop-proof design prevents pin damage and short circuits
- Fully tooled for all MIL-STD-1560 insert arrangements
- Contact options include size #22D, #20, #16, #12, and High-Speed Twinax, Quadrax, and Octaxial El Ochito Size #8 plus hybrid arrangements
- 500 mating cycles exceeds MIL-DTL-38999 specification

38999 SERIES IV ACCESSORIES

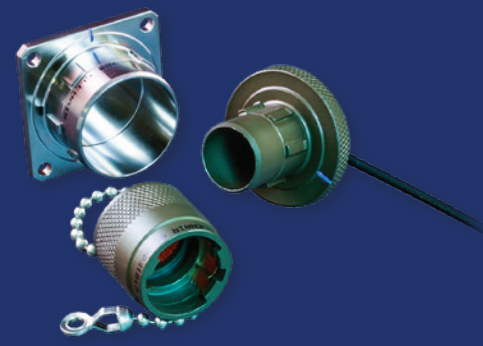

QPL accessories including protective covers and dummy receptacles

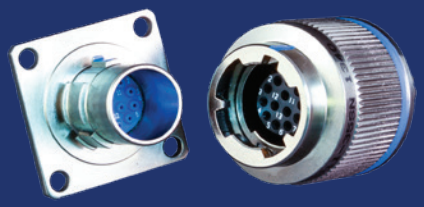

Series IV solutions are available in environmental and hermetic class configurations in shell sizes from 11–25 supporting a popular range of MIL-STD-1560 insert arrangements

Glenair's complete Series IV solution includes support for power, signal, and hybrid insert arrangments including shielded coax, #22, #20, #16 and #12 contacts

"BETTER-THAN-QPL" SUPERNINE SERIES IV CONNECTOR DESIGNS

Sav-Con® connector saver, black zinc-nickel finish

Dual-flange panel-mount feedthrough

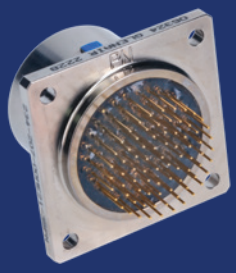

Panel-mount receptacle with sealed PC-tails

Plug with wing-lock coupling and EMI ground fingers

SUPPORTED CRIMP-CONTACT SHELL STYLES

Plug

Wall-Mount Receptacle

Box-Mount Receptacle

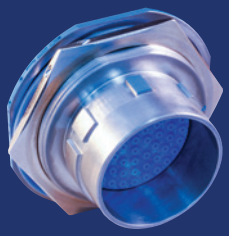

Jam-Nut Receptacle

In-Line Receptacle

MIL-STD-1560 standard power and signal contact arrangements
For environmental and hermetic connectors - pin front view

CONTACTS			
Contact Size (environmental contacts shown in pictures below)			
Size #22D Environmental: 5 Amp Max. Current Hermetic: 3 Amp Max. Current #22-#28 AWG	Size #20 Contacts Environmental: 7.5 Amp Max. Current Hermetic: 5 Amp Max. Current #20-#24 AWG	Size #16 Contacts Environmental 13 Amp Max. Current Hermetic: 10 Amp Max. Current #16-#20 AWG	Size #12 Contacts Environmental 23 Amp Max. Current Hermetic: 17 Amp Max. Current #12-#14 AWG
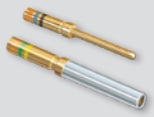		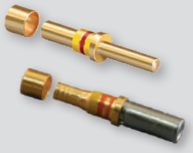	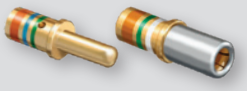

CONTACT SIZE 22D		
Number of Conctacts	D38999 Sr III	D38999 Sr IV
6	A35	
13	B35	B35
22	C35	C35
37	D35	D35
55	E35	E35
66	F35	F35
67	F45	F45
79	G35	G35
100	H35	H35
128	J35	J35

CONTACT SIZE 16		
Number of Conctacts	D38999 Sr III	D38999 Sr IV
2	B2	B2
4	C4	C4
5	D5	D5
8	E8	E8
11	F11	F11
16	G16	G16
21	H21	H21
16	H97	H97
11	H99	H99
29	J29	J29
37	J37	J37

38999 SERIES III AND IV SHELL SIZE CODE REFERENCE					
Shell size	Code letter	Shell size	Code letter	Shell size	Code letter
9	A	15	D	21	G
11	B	17	E	23	H
13	C	19	F	25	J

CONTACT SIZE 20		
Number of Conctacts	D38999 Sr III	D38999 Sr IV
3	A98	
4	B4	B4
5	B5	B5
6	B98	B98
7	B99	B99
8	C8	C8
10	C98	C98
18	D18	D18
19	D19	D19
26	E26	E26
32	F32	F32
24	G24	G24
25	G25	G25
27	G27	G27
41	G41	G41
32	H32	H32
34	H34	H34
36	H36	H36
53	H53	H53
55	H55	H55
61	J61	J61

CONTACT SIZE 12		
Number of Conctacts	D38999 Sr III	D38999 Sr IV
6	E6	E6
11	G11	G11
19	J19	J19

© 2025 Glenair, Inc • 1211 Air Way, Glendale, CA 91201 • 818-247-6000 • www.glenair.com • U.S. CAGE code 06324 • SuperNine Series IV
Dimensions in Inches (millimeters) are subject to change without notice.

MIL-STD-1560 standard power and signal contact arrangements
For environmental and hermetic connectors - pin front view

Contact Legend
#22D ⊙ #16 ⊕
#20 ⊖ #12 ◒

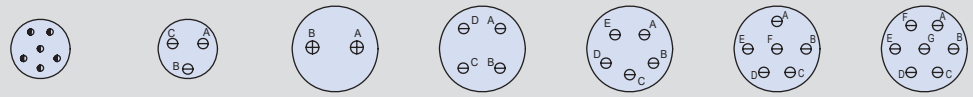

Insert Arrangement	A35	A98	B2	B4	B5	B98	B99
No. of Contacts and Contact Size	6 #22D	3 #20	2 #16	4 #20	5 #20	6 #20	7 #20
Service Rating	M	I	I	I	I	I	I

Contact Legend
#22D ⊙ #16 ⊕
#20 ⊖ #12 ◒

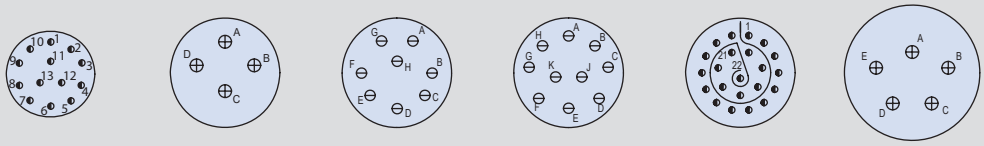

Insert Arrangement	B35	C4	C8	C98	C35	D5
No. of Contacts and Contact Size	13 #22D	4 #16	8 #20	10 #20	22 #22D	5 #16
Service Rating	M	I	I	I	M	II

Contact Legend
#22D ⊙ #16 ⊕
#20 ⊖ #12 ◒

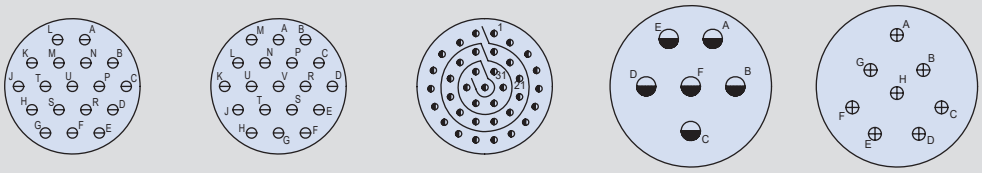

Insert Arrangement	D18	D19	D35	E6	E8
No. of Contacts and Contact Size	18 #20	19 #20	37 #22D	6 #12	8 #16
Service Rating	I	I	M	I	II

Contact Legend
#22D ⊙ #16 ⊕
#20 ⊖ #12 ◒

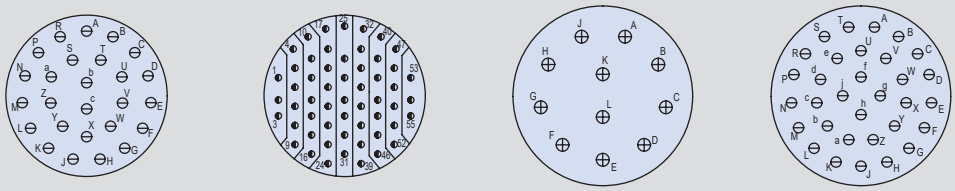

Insert Arrangement	E26	E35	F11	F32
No. of Contacts and Contact Size	26 #20	55 #22D	11 #16	32 #20
Service Rating	I	M	II	I

Contact Legend
#22D ⊙ #16 ⊕
#20 ⊖ #12 ◒

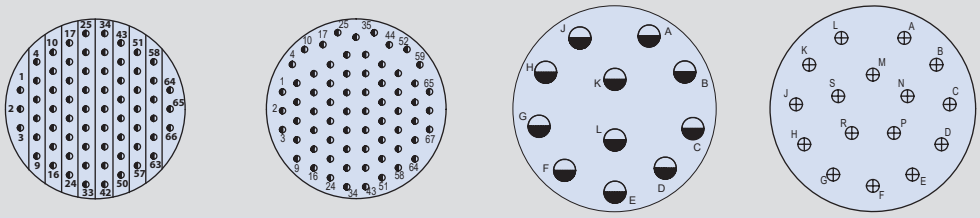

Insert Arrangement	F35	F45	G11	G16
No. of Contacts and Contact Size	66 #22D	67 #22D	11 #12	16 #16
Service Rating	M	M	I	II

MIL-STD-1560 standard power and signal contact arrangements
For environmental and hermetic connectors - pin front view

Contact Legend
#22D ⊕ #16 ⊕
#20 ⊖ #12 ◒

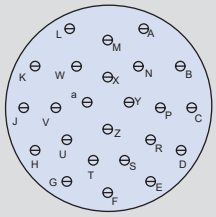
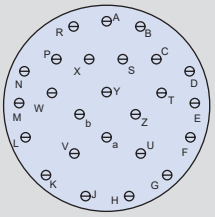
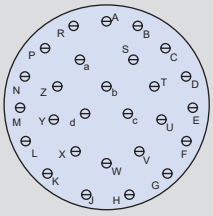
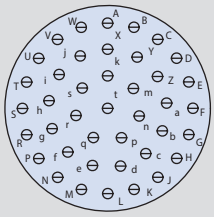

Insert Arrangement	G24	G25	G27	G41
No. of Contacts and Contact Size	24 #20	25 #20	27 #20	41 #20
Service Rating	I	I	I	I

Contact Legend
#22D ⊕ #16 ⊕
#20 ⊖ #12 ◒

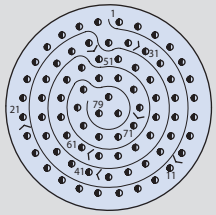
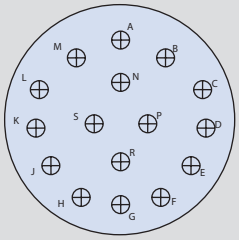
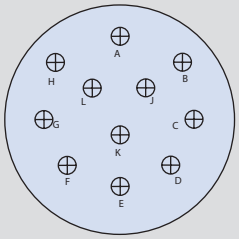
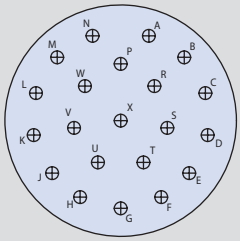

Insert Arrangement	G35	H97	H99	H21
No. of Contacts and Contact Size	79 #22D	16 #16	11 #16	21 #16
Service Rating	M	I	II	II

Contact Legend
#22D ⊕ #16 ⊕
#20 ⊖ #12 ◒

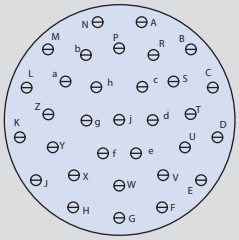
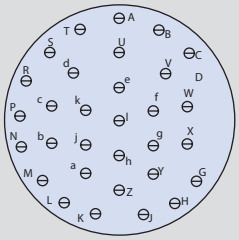
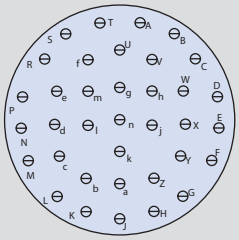
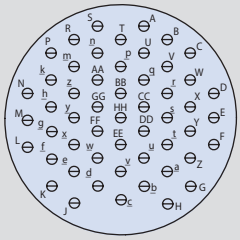

Insert Arrangement	H32	H34	H36	H53
No. of Contacts and Contact Size	32 #20	34 #20	36 #20	53 #20
Service Rating	I	I	I	I

Contact Legend
#22D ⊕ #16 ⊕
#20 ⊖ #12 ◒

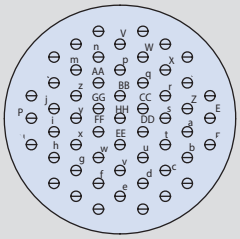
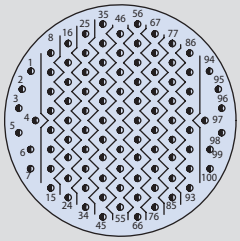
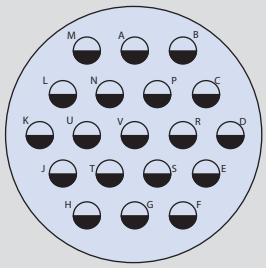

Insert Arrangement	H55	H35	J19
No. of Contacts and Contact Size	55 #20	100 #22D	19 #12
Service Rating	I	M	I

© 2025 Glenair, Inc • 1211 Air Way, Glendale, CA 91201 • 818-247-6000 • www.glenair.com • U.S. CAGE code 06324 • SuperNine Series IV
Dimensions in Inches (millimeters) are subject to change without notice.

MIL-STD-1560 standard power and signal contact arrangements For environmental and hermetic connectors - pin front view

Contact Legend
#22D • #16 ⊕
#20 ⊖ #12 ◒

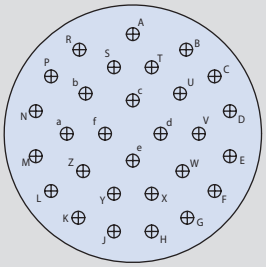

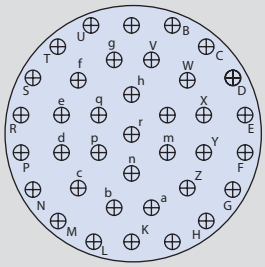

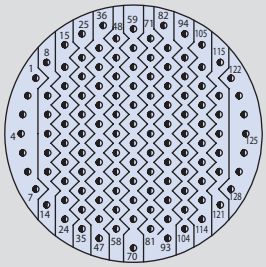

Insert Arrangement	J29	J37	J35
No. of Contacts and Contact Size	29 #16	37 #16	128 #22D
Service Rating	I	II	M

Contact Legend
#22D • #16 ⊕
#20 ⊖ #12 ◒

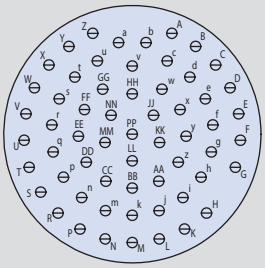

Insert Arrangement	J61
No. of Contacts and Contact Size	61 #20
Service Rating	I

	SUGGESTED OPERATING VOLTAGE		TEST VOLTAGE AC RMS 60HZ							
	(Sea Level)		Sea Level		50,000 Ft.		70,000 Ft.		100,000 Ft	
Service Rating	AC (RMS)	DC	unmated	mated	unmated	mated	unmated	mated	unmated	mated
M	400	550	1300	1300	550	800	350	800	200	800
N	300	450	1000	1000	400	600	260	600	200	600
I	600	850	1800	1800	600	1000	400	1000	200	1000
II	900	1250	2300	2300	800	1000	500	1000	200	1000

Note: The establishment of electrical safety factors is left entirely to the designer, as he is in the position to know exactly what peak voltages, switching currents, transients, etc. can be expected in a particular circuit

38999 SERIES III AND IV SHELL SIZE CODE REFERENCE					
Shell size	Code letter	Shell size	Code letter	Shell size	Code letter
9	A	15	D	21	G
11	B	17	E	23	H
13	C	19	F	25	J

SuperNine® Series IV Environmental

MIL-STD-1560 standard power and signal contact arrangements
For environmental and hermetic connectors - pin front view

COMBO CONTACT ARRANGEMENTS

Contact Size (environmental contacts shown in pictures below)			Number of Contacts #20	Number of Contacts #16	Number of Contacts #12	D38999 Sr III & IV
Size #20 Contacts Environmental: 7.5 Amp Max. Current Hermetic: 5 Amp Max. Current #20-#24 AWG	Size #16 Contacts Environmental 13 Amp Max. Current Hermetic: 10 Amp Max. Current #16-#20 AWG	Size #12 Contacts Environmental 23 Amp Max. Current Hermetic: 17 Amp Max. Current #12-#14 AWG	14	1		D15
			8	4		D97
			21	2		E99
			26	2		F28
			29	1		F30
			19	4	4	G29
			37	2		G39
			48	8		J4
				12	12	J24
			23	20		J43

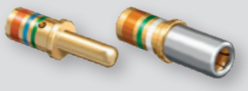

Contact Legend
#22D • #16 ⊕
#20 ⊖ #12 ◒

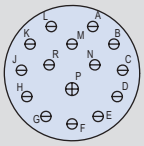

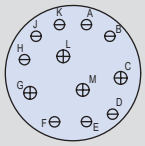

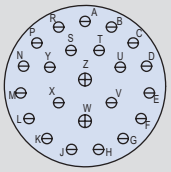

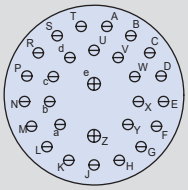

Insert Arrangement	D15		D97		E99		F28	
No. of Contacts and Size	1X #16	14X #20	4X #16	8X #20	2X #16	21X #20	2X #16	26X #20
Service Rating	I		I		I		I	

Contact Legend
#22D • #16 ⊕
#20 ⊖ #12 ◒

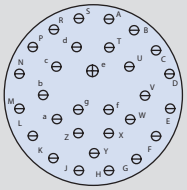

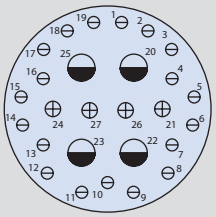

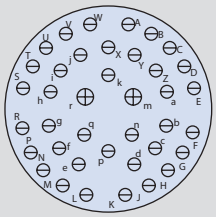

Insert Arrangement	F30		G29			G39	
No. of Contacts and Size	1X #16	29X #20	4x #12	4X #16	19X #20	2X #16	37X #20
Service Rating	I		I			I	

Contact Legend
#22D • #16 ⊕
#20 ⊖ #12 ◒

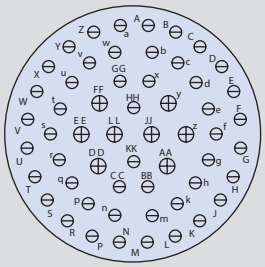

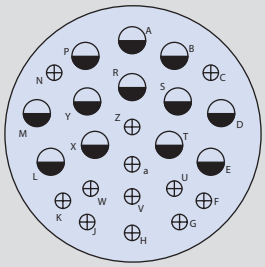

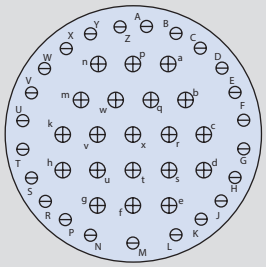

Insert Arrangement	J4		J24		J43	
No. of Contacts and Size	8X #16	48X #20	12X #12	12X #16	20X #16	23X #20
Service Rating	I		I		I	

© 2025 Glenair, Inc • 1211 Air Way, Glendale, CA 91201 • 818-247-6000 • www.glenair.com • U.S. CAGE code 06324 • SuperNine Series IV
Dimensions in Inches (millimeters) are subject to change without notice.

MIL-STD-1560 standard power and signal contact arrangements
For environmental and hermetic connectors - pin front view

Contact Legend
#22D #16
#20 #12
#8

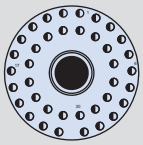

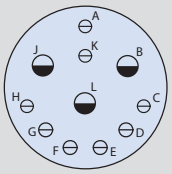

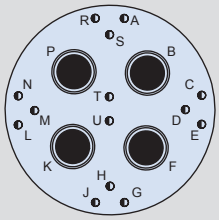

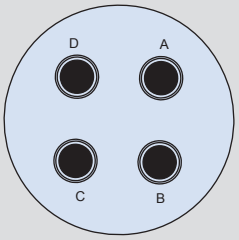

Insert Arrangement	E2		E11			F18		G75
No. of Contacts	1x #8	38x #22D	1x 12	2x 12	8x 20	4x #8	14x #22D	4x #8
Service Rating	Twinax	M	Coax	Twinax	N	Twinax	M	Twinax

Contact Legend
#22D #16
#20 #12
#8

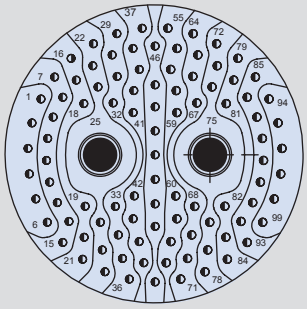

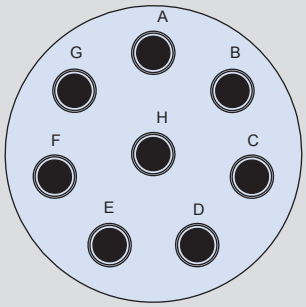

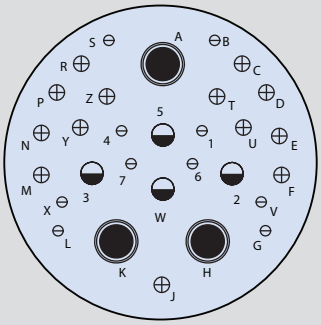

Insert Arrangement	J7		J8	J20			
No. of Contacts and Size	2x #8	97x #22D	8x #8	3x #8	4x #12	13x #16	10x #20
Service Rating	Twinax	M	Twinax	Twinax	Co-ax	N	N

Contact Legend
#22D #16
#20 #12
#8

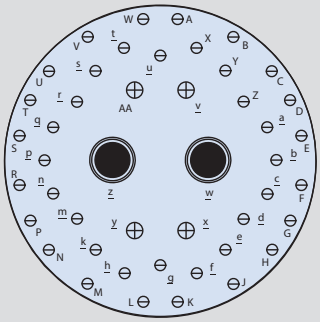

Insert Arrangement	J46			J90		
No. of Contacts and Size	2x #8	4x #16	40x #20	2x #8	4x #16	40x #20
Service Rating	Coax	I	I	Twinax	I	I

J46 and J90 share same layout, with the exception of the size #8 contact

MAX CURRENT RATING (AMPS)				
Contact Size	22D	20	16	12
Environ.	3			
Coaxial Contacts: 1 amp				
Twinax Contacts: 1 Amp				

CONTACT ARRANGEMENTS					
Number of Contacts					D38999
#22D	#20	#16	#12	#8	Sr III & IV
38				1	E2
14				4	F18
				4	G75
97				2	J7
				8	J8
	10	13	4	3	J20
	40	4		2	J46
	40	4		2	J90

SuperNine® Series IV Environmental

MIL-DTL-38999 Series IV Type
234-205 Plug with wing-lock coupling

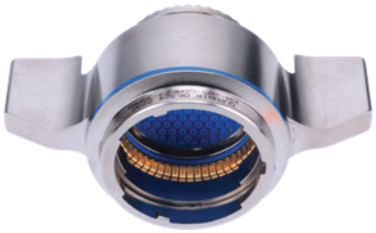

-1 standard wing nut

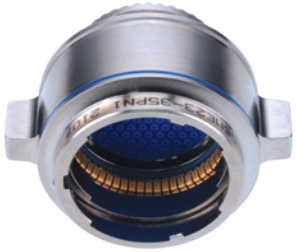

-2 low-profile wing nut

"BETTER-THAN-QPL" FEATURES AND BENEFITS

- Secure breech-lock mating connector meets D38999 shock and vibe
- Improved plug ground fingers deliver outstanding EMI performance—equal to D38999 Series III
- Glenair Signature Tin Zinc finish class is RoHS compliant and cadmium compatible
- Precision-machined key/keyway polarization for reliable mismating protection
- Scoop-proof design prevents pin damage and short circuits
- Fully tooled for all MIL-STD-1560 insert arrangements
- Contact options include size #22D, #20, #16, and #12 (see High-Speed series for Size #8)
- 500 mating cycles exceeds MIL-DTL-38999 specification

HOW TO ORDER

Sample Part Number	234-205	G6	NF	17	-8	P	N	2

Basic Part Number	**234-205**
Connector Style	**G6** = Plug, EMI Spring
Material/Finish	**NF**, **MA**, **MT**, **ME**, **MN**, **TZ**, **ZR**, **Z1**, **ZL** (See Table I)
Connector Size	**B**, **C**, **D**, **E**, **F**, **G**, **H**, **J**
Insert Arrangement	PER MIL-STD-1560
Contact Style	(See Table II)
Alternate Polarization	**A**, **B**, **C**, **D**, **E**, **K**, **L**, **M**, **R**, **N** = Normal
Wing Nut Profile	**1** = Standard **2** = Low Profile

TABLE I - MATERIAL/FINISH

Equiv Class	Sym	Material	Finish
W	**NF**	Aluminum Alloy	Cad/O.D. over Electroless Nickel
G*	**MA****		Electroless Nickel, Matte
T*	**MT**		Nickel-PTFE
F	**ME**		Electroless Nickel
AA	**MN**		MegaNickel
V	**TZ**		Tin-Zinc
Z*	**ZR**		Zinc Ni, Black (Tri-Valent CR)
K*	**Z1**	Stainless Steel	Passivate
L*	**ZL**		Electrodeposited Nickel

* = Glenair Equivalent Only

** = Connectors for space applications must be ordered with "MA" finish and mod code "-186T" to conform to the thermal vacuum outgassing requirements of class G.

TABLE II - CONTACT STYLE

Sym	Description	Contact P/N
P	Pin, Gold	M39029/58
S	Socket, Gold	M39029/56
A	Pin Insert, Less Pin Contacts	
B	Socket Insert, Less Socket Contacts	

© 2025 Glenair, Inc • 1211 Air Way, Glendale, CA 91201 • 818-247-6000 • www.glenair.com • U.S. CAGE code 06324 • SuperNine Series IV
Dimensions in Inches (millimeters) are subject to change without notice.

MIL-DTL-38999 Series IV Type
234-205 Plug with wing-lock coupling

TABLE III -1 STANDARD WING-NUT PROFILE DIMENSIONS

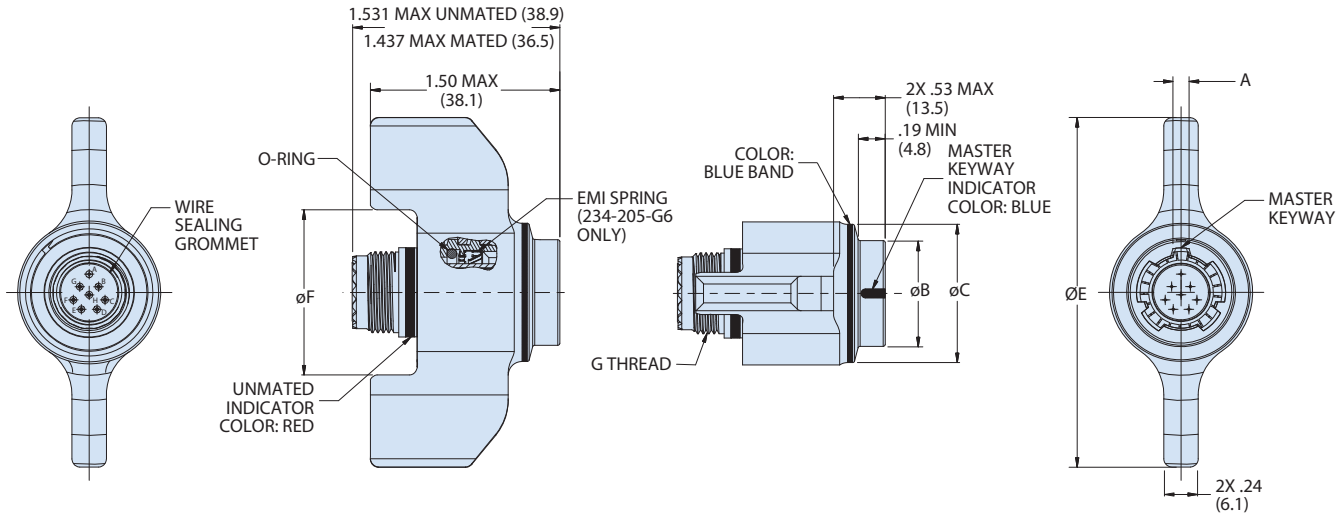

Shell Size	Shell Size Code	A		ØB Max	ØC Max	G Thread	ØE Max	ØF
		Socket	Pin					
11	B	.116 (2.95)	.076 (1.93)	.776 (19.7)	1.047 (26.6)	M15 X 1.0-6g 0.100R	2.540 (64.52)	1.200 (30.48)
13	C	.117 (2.97)	.077 (1.96)	.902 (22.9)	1.220 (31.0)	M18 X 1.0-6g 0.100R	2.690 (68.33)	1.340 (34.04)
15	D	.137 (3.48)	.097 (2.46)	1.039 (26.4)	1.346 (34.2)	M22 X 1.0-6g 0.100R	2.840 (72.14)	1.500 (38.10)
17	E			1.150 (29.2)	1.472 (37.4)	M25 X 1.0-6g 0.100R	2.940 (74.68)	1.600 (40.64)
19	F	.157 (3.99)	.117 (2.97)	1.276 (32.4)	1.583 (40.2)	M28 X 1.0-6g 0.100R	3.060 (77.72)	1.720 (43.69)
21	G			1.402 (35.6)	1.705 (43.3)	M31 X 1.0-6g 0.100R	3.190 (81.03)	1.720 (43.69)
23	H	.177 (4.50)	.137 (3.48)	1.528 (38.8)	1.831 (46.5)	M34 X 1.0-6g 0.100R	3.310 (84.07)	1.980 (50.29)
25	J			1.650 (41.9)	1.957 (49.7)	M37 X 1.0-6g 0.100R	3.440 (87.38)	2.100 (53.34)

NOTES

1. Material/Finish:
   - Barrel, Coupling Nut - See Table I
   - Grounding Spring - BeCu Alloy / Nickel or Gold Plate
   - Insulator - High Grade Rigid Dielectric
   - Seals, Grommet - Fluorosilicone Blend
   - Contacts - Copper Alloy / See Table II
2. Glenair's 234-205 connectors are designed to meet the applicable performance and interface requirements of MIL-DTL-38999, Series IV, D38999/46, and MIL-STD-1560 except as shown and/or noted. Glenair connectors mate with any QPL manufacturer's MIL-DTL-38999, Series IV receptacle connectors having the same shell size, insert arrangement, and polarization.
3. Connector is supplied with contacts (including spares), insertion/removal tool, and sealing plugs where indicated in Table II.
4. Blue color band indicates rear release retention system.
5. Insert arrangement is in accordance with MIL-STD-1560. Contact manufacturer for additional arrangement options.

MIL-DTL-38999 Series IV Type
234-205 Plug with wing-lock coupling

TABLE IV -2 LOW-PROFILE WING-NUT DIMENSIONS

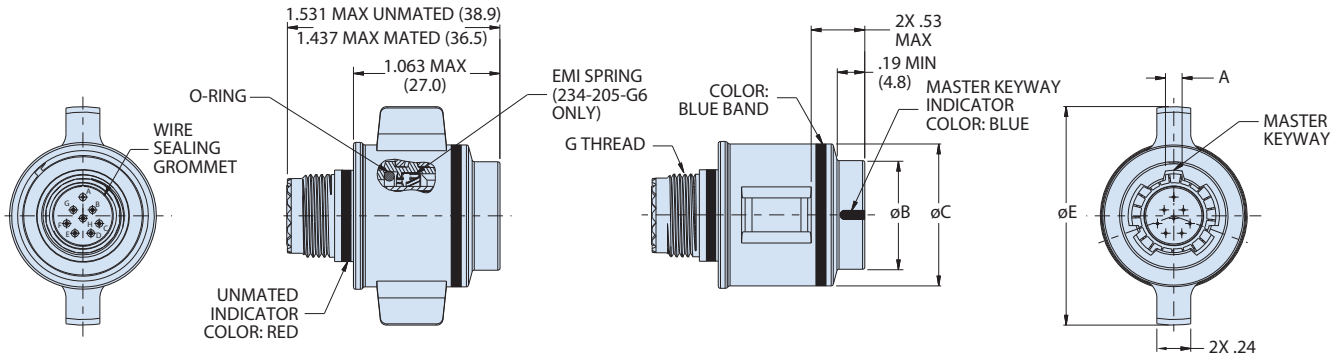

Shell Size	Shell Size Code	A		ØB Max	ØC Max	G Thread	ØE Max
		Socket	Pin				
11	B	.116 (2.95)	.076 (1.93)	.776 (19.7)	1.047 (26.6)	M15 X 1.0-6g 0.100R	1.55 (39.4)
13	C	.117 (2.97)	.077 (1.96)	.902 (22.9)	1.220 (31.0)	M18 X 1.0-6g 0.100R	1.71 (43.4)
15	D	.137 (3.48)	.097 (2.46)	1.039 (26.4)	1.346 (34.2)	M22 X 1.0-6g 0.100R	1.85 (47.0)
17	E			1.150 (29.2)	1.472 (37.4)	M25 X 1.0-6g 0.100R	1.96 (49.8)
19	F	.157 (3.99)	.117 (2.97)	1.276 (32.4)	1.583 (40.2)	M28 X 1.0-6g 0.100R	2.08 (52.8)
21	G			1.402 (35.6)	1.705 (43.3)	M31 X 1.0-6g 0.100R	2.21 (56.1)
23	H	.177 (4.50)	.137 (3.48)	1.528 (38.8)	1.831 (46.5)	M34 X 1.0-6g 0.100R	2.33 (59.2)
25	J			1.650 (41.9)	1.957 (49.7)	M37 X 1.0-6g 0.100R	2.46 (62.5)

© 2025 Glenair, Inc • 1211 Air Way, Glendale, CA 91201 • 818-247-6000 • www.glenair.com • U.S. CAGE code 06324 • SuperNine Series IV
Dimensions in Inches (millimeters) are subject to change without notice.

SuperNine® Series IV Environmental

Glenair®

MIL-DTL-38999 Series IV Type
234-206 Breech-lock mating plug and receptacles

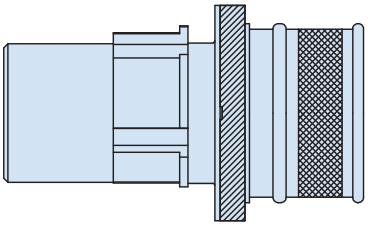

HOW TO ORDER

Sample Part Number	234-206	-D0	NF	11	-35	P	N	-T
Basic Part Number	**234-206**							
Connector Style	(See Table II)							
Material/Finish	(See Table I)							
Connector Size	**B, C, D, E, F, G, H, J**							
Insert Arrangement	PER MIL-STD-1560							
Contact Style	(See Table III)							
Alternate Polarization	**A, B, C, D, K, L, M, R, N** = Normal							
Wing Nut Profile	**-T** = For shrink boot option (See Table VI) Omit for no boot							

"BETTER-THAN-QPL" FEATURES AND BENEFITS

- Secure breech-lock mating connector meets D38999 shock and vibe
- Integral banding porch on plug eliminates need for add-on accessories
- Improved plug ground fingers deliver outstanding EMI performance—equal to D38999 Series III
- Glenair Signature Tin Zinc finish class is RoHS compliant and cadmium compatible
- Precision-machined key/keyway polarization for reliable mismating protection
- Scoop-proof design prevents pin damage and short circuits
- Fully tooled for all MIL-STD-1560 insert arrangements
- Contact options include size #22D, #20, #16, and #12 (see High-Speed series for Size #8)
- 500 mating cycles exceeds MIL-DTL-38999 specification

TABLE I - MATERIAL/FINISH

Equiv Class	Sym	Material	Finish
W	**NF**	Aluminum Alloy	Cad/O.D. over Electroless Nickel
G*	**MA****		Electroless Nickel, Matte
T*	**MT**		Nickel-PTFE
F	**ME**		Electroless Nickel
AA	**MN**		MegaNickel
V	**TZ**		Tin-Zinc
Z*	**ZR**		Zinc Ni, Black (Tri-Valent CR)
K*	**Z1**	Stainless Steel	Passivate
L*	**ZL**		Electrodeposited Nickel

* = Glenair Equivalent Only

** = Connectors for space applications must be ordered with "MA" finish and mod code "-186T" to conform to the thermal vacuum outgassing requirements of class G.

TABLE II - CONNECTOR STYLE

Sym	Description
D0	Receptacle, wall-mount with round holes,
05	In-line receptacle
CM	Receptacle, wall-mount with metric clinch nuts
CS	Receptacle, wall-mount with standard clinch nuts
HM	Receptacle, wall-mount with metric helicoil
HS	Receptacle, wall-mount with standard helicoils
07	Receptacle, jam nut mount
G6	Plug, EMI spring

TABLE III - CONTACT STYLE

Sym	Description
P	Pin, Gold
S	Socket, Gold
H	Pin, Pd/Ni
J	Socket, Pd/Ni
A	Pin Insert, Less Pin Contacts
B	Socket Insert, Less Socket Contacts

TABLE VI - SHRINK BOOTS

Shell Size Code	Shell Size	Part Number
B	11	770-003S103W1
C	13	770-003S103W1
D	15	770-003S105W1
E	17	770-003S105W1
F	19	770-003S106W1
G	21	770-003S106W1
H	23	770-003S107W1
J	25	770-003S107W1

MIL-DTL-38999 Series IV Type
234-206 Breech-lock mating plug and receptacles

TABLE V - WALL-MOUNT AND IN-LINE RECEPTACLE DIMENSIONS

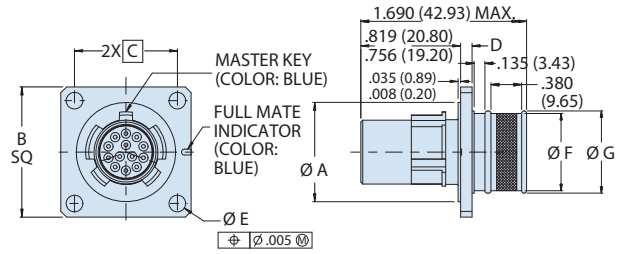

D0 - WALL MOUNT RECEPTACLE WITH ROUND HOLES

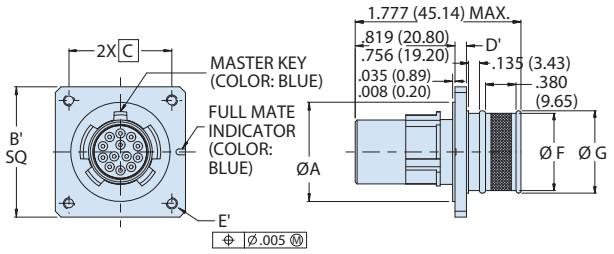

HS / HM - WALL MOUNT RECEPTACLE WITH HELICOILS

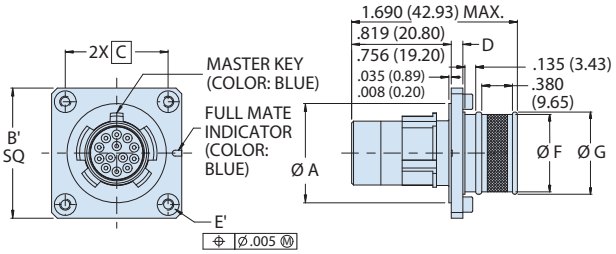

CS / CM - WALL MOUNT RECEPTACLE WITH CLINCH NUTS

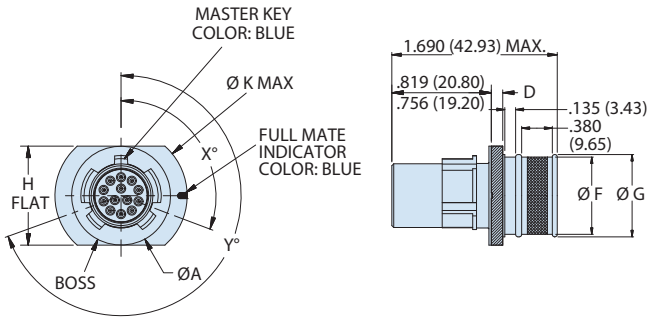

05 - IN-LINE RECEPTACLE

Size Code	Shell Size	ØA	B SQ	B' SQ	C BSC	D	D'	ØE	E' HS/CS	E' HM/CM	ØF	ØG	H Flat	ØK Max.
B	11	.793 (20.14) .778 (19.76)	1.051 (26.70) 1.008 (25.60)	1.187 (30.15) 1.147 (29.13)	0.812 (20.62)	.102 (2.59) .083 (2.11)	.180 (4.57) .150 (3.81)	.137 (3.48) .123 (3.12)	#4-40 UNC	M3 X0.5	0.600 (15.24)	0.648 (16.46)	0.785 (19.94)	1.054 (26.77)
C	13	.919 (23.34) .904 (22.96)	1.145 (29.08) 1.103 (28.02)	1.281 (32.54) 1.241 (31.52)	0.906 (23.01)						0.700 (17.78)	0.762 (19.35)	0.911 (23.14)	1.226 (31.14)
D	15	1.044 (26.52) 1.029 (26.14)	1.240 (31.50) 1.197 (30.40)	1.344 (34.14) 1.304 (33.12)	0.969 (24.61)						0.835 (21.21)	0.898 (22.81)	1.036 (26.31)	1.351 (34.32)
E	17	1.170 (29.72) 1.155 (29.34)	1.334 (33.88) 1.292 (32.82)	1.437 (36.50) 1.397 (35.48)	1.062 (26.97)						0.960 (24.38)	1.022 (25.96)	1.162 (29.51)	1.476 (37.49)
F	19	1.294 (32.87) 1.279 (32.49)	1.460 (37.08) 1.418 (36.02)	1.531 (38.89) 1.491 (37.87)	1.156 (29.36)						1.062 (26.97)	1.125 (28.58)	1.286 (32.66)	1.586 (40.28)
G	21	1.419 (36.04) 1.404 (35.66)	1.582 (40.18) 1.540 (39.12)	1.625 (41.28) 1.585 (40.26)	1.250 (31.75)	.133 (3.38) .115 (2.92)					1.188 (30.18)	1.250 (31.75)	1.411 (35.84)	1.711 (43.46)
H	23	1.544 (39.22) 1.529 (38.84)	1.708 (43.38) 1.666 (42.32)	1.750 (44.45) 1.710 (43.43)	1.375 (34.93)		.190 (4.83) .170 (4.32)	.157 (3.99) .142 (3.61)	#6-32 UNC	M4 X0.7	1.275 (32.39)	1.338 (33.99)	1.536 (39.01)	1.836 (46.63)
J	25	1.669 (42.39) 1.654 (42.01)	1.834 (46.58) 1.792 (45.52)	1.875 (47.63) 1.835 (46.61)	1.500 (38.10)						1.475 (37.47)	1.528 (38.81)	1.661 (42.19)	1.964 (49.89)

TABLE IV - MOUNTING HOLES

Size Code	Shell Size	ØN Min	ØP Holes	R BSC
B	11	0.796 (20.22)	.133 (3.38) / .123 (3.12)	0.812 (20.62)
C	13	0.922 (23.42)		0.906 (23.01)
D	15	1.047 (26.59)		0.969 (24.61)
E	17	1.219 (30.96)		1.062 (26.97)
F	19	1.297 (32.94)		1.156 (29.36)
G	21	1.422 (36.12)		1.250 (31.75)
H	23	1.547 (39.29)	.159 (4.04) / .149 (3.78)	1.375 (34.93)
J	25	1.672 (42.47)	.155 (3.94) / .145 (3.68)	1.500 (38.10)

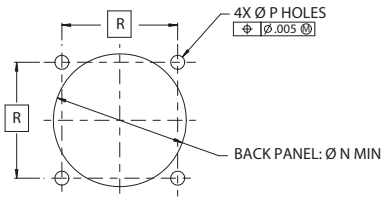

RECOMMENDED MOUNTING HOLES
FOR WALL MOUNT RECEPTACLES

© 2025 Glenair, Inc • 1211 Air Way, Glendale, CA 91201 • 818-247-6000 • www.glenair.com • U.S. CAGE code 06324 • SuperNine Series IV
Dimensions in Inches (millimeters) are subject to change without notice.

MIL-DTL-38999 Series IV Type
234-206 Breech-lock mating plug and receptacles

TABLE VII - JAM NUT MOUNT RECEPTACLE DIMENSIONS

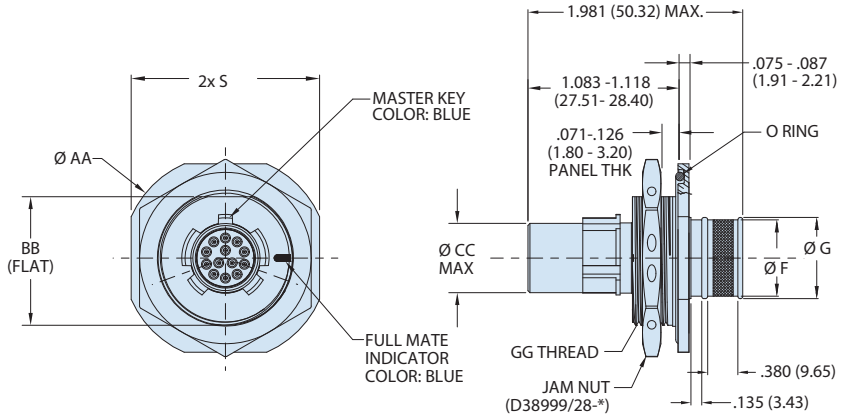

07 - JAM NUT MOUNT RECETPACLE

Shell Size	Shell Size Code	ØAA	BB (Flat)	ØCC Max	GG Thread	S	O-Ring P/N
11	B	1.520 (38.6) 1.480 (37.6)	.942 (23.93) .935 (23.74)	.509 (12.93)	M25 X 1.0-6g 0.100R	1.394 (35.4) 1.354 (34.4)	AS3582-024
13	C	1.642 (41.7) 1.602 (40.7)	1.066 (27.08) 1.059 (26.89)	.634 (16.10)	M28 X 1.0-6g 0.100R	1.520 (38.6) 1.480 (37.6)	AS3582-026
15	D	1.768 (44.9) 1.728 (43.9)	1.191 (30.26) 1.184 (30.07)	.759 (19.28)	M31 X 1.0-6g 0.100R	1.642 (41.7) 1.602 (40.7)	AS3582-028
17	E	1.957 (49.7) 1.917 (48.7)	1.321 (33.56) 1.314 (33.37)	.885 (22.48)	M34 X 1.0-6g 0.100R	1.799 (45.7) 1.760 (44.7)	AS3582-029
19	F	2.035 (51.7) 1.996 (50.7)	1.441 (36.61) 1.434 (36.42)	1.009 (25.63)	M38 X 1.0-6g 0.100R	1.909 (48.5) 1.870 (47.5)	AS3582-030
21	G	2.157 (54.8) 2.118 (53.8)	1.566 (39.78) 1.559 (39.59)	1.134 (28.80)	M41 X 1.0-6g 0.100R	2.035 (51.7) 1.996 (50.7)	AS3582-031
23	H	2.283 (58.0) 2.244 (57.0)	1.691 (42.96) 1.684 (42.77)	1.259 (31.98)	M44 X 1.0-6g 0.100R	2.157 (54.8) 2.118 (53.8)	AS3582-032
25	J	2.409 (61.2) 2.370 (60.2)	1.816 (46.13) 1.809 (45.94)	1.384 (35.15)	M47 X 1.0-6g 0.100R	2.283 (58.0) 2.244 (57.0)	AS3582-033

TABLE VIII - JAM-NUT MOUNT RECEPTACLE PANEL CUT-OUT

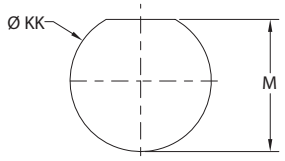

JAM-NUT RECEPTACLE
RECOMMENDED PANEL CUT-OUT

Shell Size	Shell Size Code	ØKK	M
11	B	1.020 (25.91) 1.010 (25.65)	0.955 (24.26) 0.945 (24.00)
13	C	1.145 (29.08) 1.135 (28.83)	1.085 (27.56) 1.075 (27.31)
15	D	1.270 (32.26) 1.260 (32.00)	1.210 (30.73) 1.200 (30.48)
17	E	1.395 (35.43) 1.385 (35.18)	1.335 (33.91) 1.325 (33.66)
19	F	1.520 (38.61) 1.510 (38.35)	1.460 (37.08) 1.450 (36.83)
21	G	1.645 (41.78) 1.635 (41.53)	1.585 (40.26) 1.575 (40.01)
23	H	1.770 (44.96) 1.760 (44.70)	1.710 (43.43) 1.700 (43.18)
25	J	1.895 (48.13) 1.885 (47.88)	1.835 (46.61) 1.825 (46.36)

MIL-DTL-38999 Series IV Type
234-206 Breech-lock mating plug and receptacles

PLUG, BREECH COUPLING DIMENSIONS

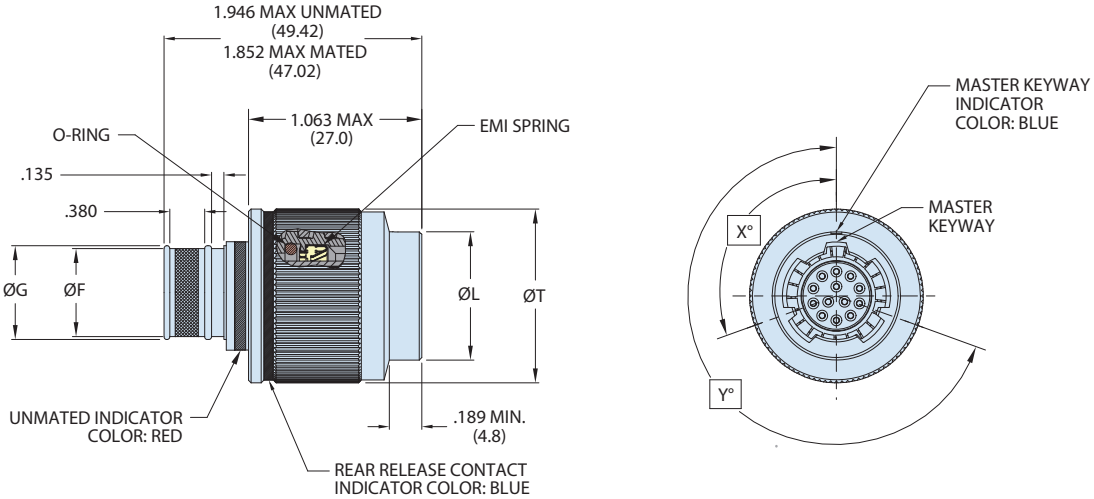

G6 - PLUG, EMI SPRING

Shell Size	Shell Size Code	ØL Max	ØT Max
11	B	.776 (19.7)	1.047 (26.6)
13	C	.902 (22.9)	1.220 (31.0)
15	D	1.039 (26.4)	1.346 (34.2)
17	E	1.150 (29.2)	1.472 (37.4)
19	F	1.276 (32.4)	1.583 (40.2)
21	G	1.402 (35.6)	1.705 (43.3)
23	H	1.528 (38.8)	1.831 (46.5)
25	J	1.650 (41.9)	1.957 (49.7)

TABLE B - POLARIZING POSITIONS

	N	A	B	C	D	K	L	M	R	U
X	110°	100°	90°	80°	70°	120°	120°	120°	120°	N/A
Y	250°	260°	270°	280°	290°	255°	265°	275°	285°	N/A

NOTES

1. Material/Finish:
   - Shell, Jam Nut - See Table I
   - Contacts - Copper Alloy / See Table III
   - Insulators - High Grade Rigid Dielectric.
   - Seals - Fluorosilicone Blend.
   - Potting - Epoxy.
2. Glenair's 234-206 receptacle connector is designed to meet the applicable performance and interface requirements of MIL-DTL-38999 Series IV except as shown and/or noted. Receptacle mates with any QPL manufacturer's MIL-DTL-38999, Series IV plug having complimentary features (shell size, insert arrangement, polarization, and contact gender).
3. Glenair's 234-206 connectors are designed to withstand a minimum of 1500 mating durability cycles when mated to a "super nine" mating connector and appropriate contacts applicable to all signal contact layouts only. High speed contacts are not intended for extended durability. Finish should be the same for both mating connectors to optimize performance..
4. Insert arrangement is in accordance with MIL-STD-1560. Arrangement shown for reference only.
5. Connector is supplied with contacts (including spares), insertion/removal tool, and sealing plugs where inidcated in Table III.

© 2025 Glenair, Inc • 1211 Air Way, Glendale, CA 91201 • 818-247-6000 • www.glenair.com • U.S. CAGE code 06324 • SuperNine Series IV
Dimensions in Inches (millimeters) are subject to change without notice.

MIL-DTL-38999 Series IV Type
234-207 Panel mount receptacles with PC tails, no standoff

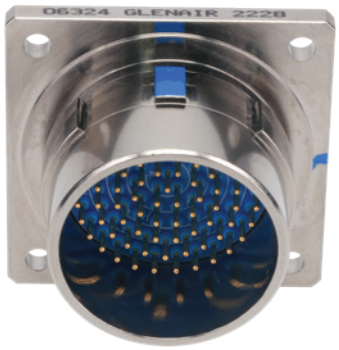

HOW TO ORDER							
Sample Part Number	234-207	-D0	NF	11	-35	P	N

Basic Part Number	**234-207**
Connector Style	**D0** = Receptacle, wall-mount through holes **HM** = Receptacle, wall-mount w/metric helicoil **HS** = Receptacle, wall-mount w/standard helicoil
Material/Finish	(See Table I)
Shell Size	**11**, **13**, **15**, **17**, **19**, **21**, **23**, **25**
Insert Arrangement	PER MIL-STD-1560
Insert Designator	**P** = Pin Contacts, Gold Plate, 1500 Cycles **S** = Socket Contact Gold Plate, 1500 Cycles **H** = Pin Contacts Pd/Ni, 1500 Cycles **J** = Socket Contact Pd/Ni, 1500 Cycles
Alternate Key Positions	**A**, **B**, **C**, **D**, **K**, **L**, **M**, **R**, **N** = Normal, **U** = Universal (Glenair Equivalent Only)

ENVIRONMENTAL CONNECTORS

"BETTER-THAN-QPL" FEATURES AND BENEFITS

- Secure breech-lock mating connector meets D38999 shock and vibe
- Glenair Signature Tin Zinc finish class is RoHS compliant and cadmium compatible
- Precision-machined key/keyway polarization for reliable mismating protection
- Scoop-proof design prevents pin damage and short circuits
- Fully tooled for all MIL-STD-1560 insert arrangements
- Contact options include size #22D, #20, #16, and #12 (see High-Speed series for Size #8)
- 500 mating cycles exceeds MIL-DTL-38999 specification

TABLE I - MATERIAL/FINISH

Equiv Class	Sym	Material	Finish
W	**NF**	Aluminum Alloy	Cad/O.D. over Electroless Nickel
G*	**MA****		Electroless Nickel, Matte
T*	**MT**		Nickel-PTFE
F	**ME**		Electroless Nickel
AA	**MN**		MegaNickel
V	**TZ**		Tin-Zinc
Z*	**ZR**		Zinc Ni, Black (Tri-Valent CR)
K*	**Z1**	Stainless Steel	Passivate
L*	**ZL**		Electrodeposited Nickel

* = Glenair Equivalent Only

** = Connectors for space applications must be ordered with "MA" finish and mod code "-186T" to conform to the thermal vacuum outgassing requirements of class G.

TABLE II - POLARIZING POSITIONS

	N	A	B	C	D	K	L	M	R	U
X	110°	100°	90°	80°	70°	120°	120°	120°	120°	N/A
Y	250°	260°	270°	280°	290°	255°	265°	275°	285°	N/A

TABLE III

Contact Size	PC Tail ØM
#23	.020 (0.51) .018 (0.46)
#22	.020 (0.51) .018 (0.46)
#20	.030 (0.76) .028 (0.71)
#16	.040 (1.02) .038 (0.97)
#12	.072 (1.83) .070 (1.78)

MIL-DTL-38999 Series IV Type
234-207 Panel mount receptacles with PC tails, no standoff

234-207 -D0 WALL MOUNT RECEPTACLE DIMENSIONS

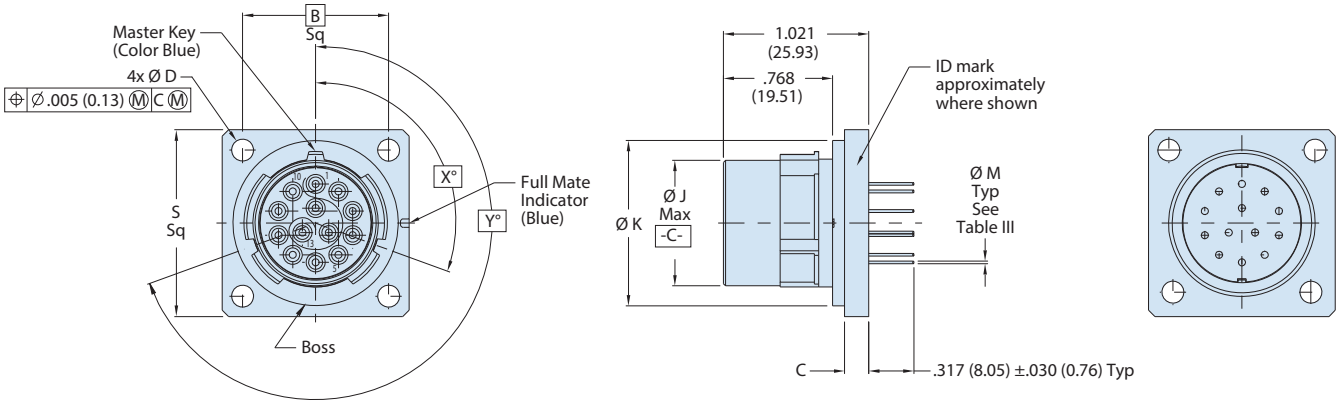

D0 WALL MOUNT
THRU HOLE

Shell Size	Shell Size Code	B Bsc	C	C'	Ø D	Ø J Max	Ø K	L Thread	L' Thread	S	S'
11	B	.812 (20.62)	.102 (2.6) .083 (2.1)	.179 (4.5) .140 (3.6)	.138 (3.5) .122 (3.1)	.509 (12.93)	.793 (20.15) .778 (19.76)	.112-40 UNC	M3 X 0.5	1.051 (26.7) 1.008 (25.6)	1.202 (30.5) 1.162 (29.5)
13	C	.906 (23.02)	.102 (2.6) .083 (2.1)		.138 (3.5) .122 (3.1)	.634 (16.10)	.913 (23.35) .904 (22.96)			1.146 (29.1) 1.102 (28.0)	1.296 (32.8) 1.256 (31.9)
15	D	.969 (24.61)	.102 (2.6) .083 (2.1)		.138 (3.5) .122 (3.1)	.759 (19.28)	1.044 (26.52) 1.029 (26.13)			1.240 (31.5) 1.197 (30.4)	1.359 (34.5) 1.319 (33.5)
17	E	1.062 (26.98)	.102 (2.6) .083 (2.1)		.138 (3.5) .122 (3.1)	.885 (22.48)	1.170 (29.72) 1.155 (29.33)			1.335 (33.9) 1.291 (32.8)	1.452 (36.9) 1.412 (35.9)
19	F	1.156 (29.36)	.102 (2.6) .083 (2.1)		.138 (3.5) .122 (3.1)	1.009 (25.63)	1.294 (32.87) 1.279 (32.48)			1.461 (37.1) 1.417 (36.0)	1.546 (39.3) 1.506 (38.3)
21	G	1.250 (31.76)	.134 (3.4) .114 (2.9)		.138 (3.5) .122 (3.1)	1.134 (28.80)	1.419 (36.05) 1.404 (35.66)			1.583 (40.2) 1.539 (39.1)	1.640 (41.7) 1.600 (40.6)
23	H	1.375 (34.93)	.134 (3.4) .114 (2.9)	.190 (4.8) .170 (4.3)	.157 (4.0) .142 (3.6)	1.259 (31.98)	1.544 (39.22) 1.529 (38.83)	.138-32 UNC	M4 X 0.7	1.709 (43.4) 1.665 (42.3)	1.765 (44.8) 1.725 (43.8)
25	J	1.500 (38.10)	.134 (3.4) .114 (2.9)		.157 (4.0) .142 (3.6)	1.384 (35.15)	1.669 (42.40) 1.654 (42.01)			1.835 (46.6) 1.791 (45.5)	1.890 (48.0) 1.850 (47.0)

TABLE IV - PANEL CUT-OUT DIMENSIONS

Shell Size	Shell Size Code	ØKK Min	BB Bsc	ØDD	ØLL Min
11	B	0.796 (20.22)	0.812 (20.62)	.133/.123	0.625 (15.88)
13	C	0.922 (23.42)	0.906 (23.01)		0.750 (19.05)
15	D	1.047 (26.59)	0.969 (24.61)		0.906 (23.01)
17	E	1.219 (30.96)	1.062 (26.97)		1.016 (25.81)
19	F	1.297 (32.94)	1.156 (29.36)		1.141 (28.98)
21	G	1.422 (36.12)	1.250 (31.75)		1.266 (32.16)
23	H	1.547 (39.29)	1.375 (34.93)	.159/.149	1.375 (34.93)
25	J	1.672 (42.47)	1.500 (38.10)	.155/.145	1.484 (37.69)

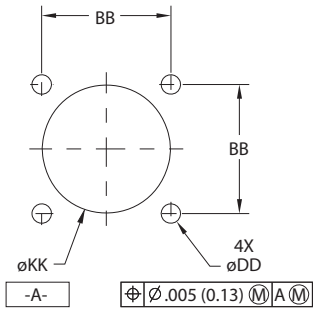

© 2025 Glenair, Inc • 1211 Air Way, Glendale, CA 91201 • 818-247-6000 • www.glenair.com • U.S. CAGE code 06324 • SuperNine Series IV
Dimensions in Inches (millimeters) are subject to change without notice.

MIL-DTL-38999 Series IV Type
234-207 Panel mount receptacles with PC tails, no standoff

234-207 -HS WALL MOUNT RECEPTACLE DIMENSIONS

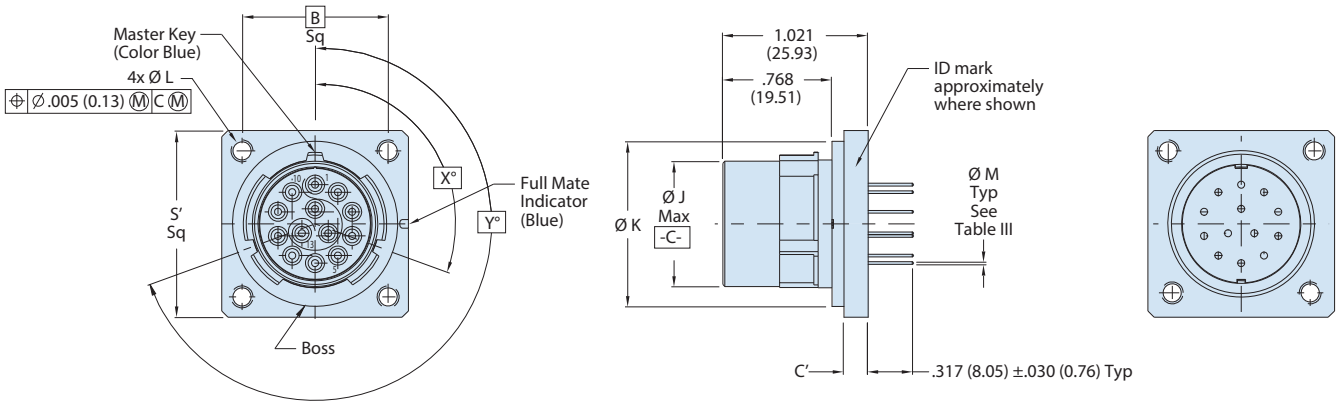

HS WALL MOUNT
STANDARD HELICOIL

234-207 -HM WALL MOUNT RECEPTACLE DIMENSIONS

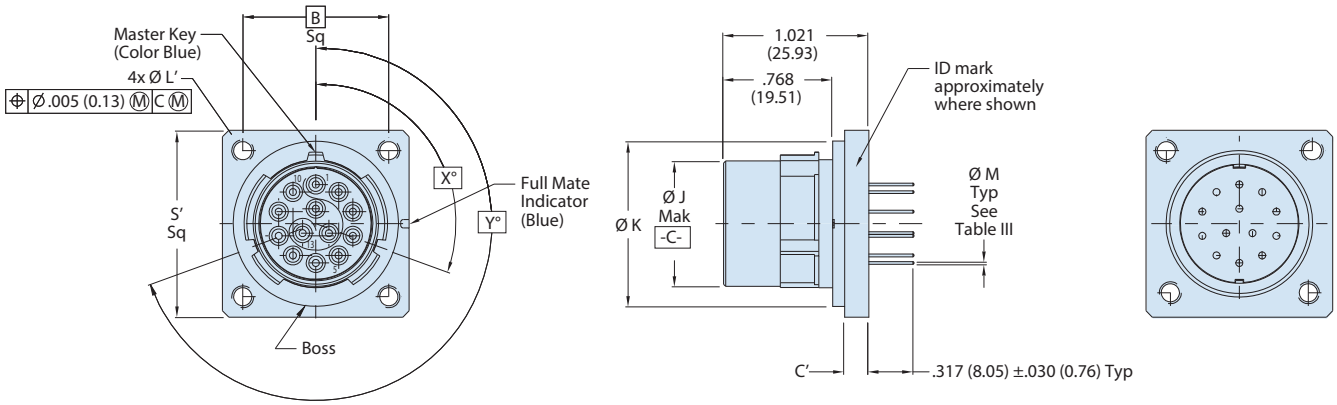

HM WALL MOUNT
METRIC HELICOIL

MIL-DTL-38999 Series IV Type
234-207-07 Jam nut receptacle with PC tails, no standoff

HOW TO ORDER								
Sample Part Number		**234-207**	**-07**	**NF**	**11**	**-35**	**P**	**N**
Basic Part Number	**234-207**							
Connector Style	07- Receptacle, Jam Nut							
Material/Finish	(See Table I)							
Shell Size	**11**, **13**, **15**, **17**, **19**, **21**, **23**, **25**							
Insert Arrangement	PER MIL-STD-1560							
Insert Designator	**P** = Pin Contacts, Gold Plate, 1500 Cycles **S** = Socket Contact Gold Plate, 1500 Cycles **H** = Pin Contacts Pd/Ni, 1500 Cycles **J** = Socket Contact Pd/Ni, 1500 Cycles							
Alternate Polarization	**A**, **B**, **C**, **D**, **K**, **L**, **M**, **R**, **N** = Normal, **U** = Universal (Glenair Equivalent Only)							

TABLE III

Contact Size	PC Tail ØM
#23	.020 (0.51) .018 (0.46)
#22	.020 (0.51) .018 (0.46)
#20	.030 (0.76) .028 (0.71)
#16	.040 (1.02) .038 (0.97)
#12	.072 (1.83) .070 (1.78)

"BETTER-THAN-QPL" FEATURES AND BENEFITS

- Secure breech-lock mating connector meets D38999 shock and vibe
- Glenair Signature Tin Zinc finish class is RoHS compliant and cadmium compatible
- Precision-machined key/keyway polarization for reliable mismating protection
- Scoop-proof design prevents pin damage and short circuits
- Fully tooled for all MIL-STD-1560 insert arrangements
- Contact options include size #22D, #20, #16, and #12 (see High-Speed series for Size #8)
- 500 mating cycles exceeds MIL-DTL-38999 specification

TABLE I - MATERIAL/FINISH

Equiv Class	Sym	Material	Finish
W	**NF**	Aluminum Alloy	Cad/O.D. over Electroless Nickel
G*	**MA****		Electroless Nickel, Matte
T*	**MT**		Nickel-PTFE
F	**ME**		Electroless Nickel
AA	**MN**		MegaNickel
V	**TZ**		Tin-Zinc
Z*	**ZR**		Zinc Ni, Black (Tri-Valent CR)
K*	**Z1**	Stainless Steel	Passivate
L*	**ZL**		Electrodeposited Nickel

* = Glenair Equivalent Only

** = Connectors for space applications must be ordered with "MA" finish and mod code "-186T" to conform to the thermal vacuum outgassing requirements of class G.

TABLE IV - POLARIZING POSITIONS

	N	A	B	C	D	K	L	M	R	U
X	110°	100°	90°	80°	70°	120°	120°	120°	120°	N/A
Y	250°	260°	270°	280°	290°	255°	265°	275°	285°	N/A

TABLE V - PANEL CUT-OUT

Shell Size	Shell Size Code	ØKK	BB
11	B	1.020 (25.91) 1.010 (25.65)	0.955 (24.26) 0.945 (24.00)
13	C	1.145 (29.08) 1.135 (28.83)	1.085 (27.56) 1.075 (27.31)
15	D	1.270 (32.26) 1.260 (32.00)	1.210 (30.73) 1.200 (30.48)
17	E	1.395 (35.43) 1.385 (35.18)	1.335 (33.91) 1.325 (33.66)
19	F	1.520 (38.61) 1.510 (38.35)	1.460 (37.08) 1.450 (36.83)
21	G	1.645 (41.78) 1.635 (41.53)	1.585 (40.26) 1.575 (40.01)
23	H	1.770 (44.96) 1.760 (44.70)	1.710 (43.43) 1.700 (43.18)
25	J	1.895 (48.13) 1.885 (47.88)	1.835 (46.61) 1.825 (46.36)

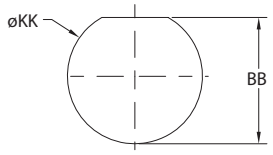

Jam-Nut Receptacle
Recommended panel cut-out

© 2025 Glenair, Inc • 1211 Air Way, Glendale, CA 91201 • 818-247-6000 • www.glenair.com • U.S. CAGE code 06324 • SuperNine Series IV
Dimensions in Inches (millimeters) are subject to change without notice.

MIL-DTL-38999 Series IV Type
234-207-07 Jam nut receptacle with PC tails, no standoff

TABLE II - JAM NUT RECEPTACLE 234-207-07 DIMENSIONS

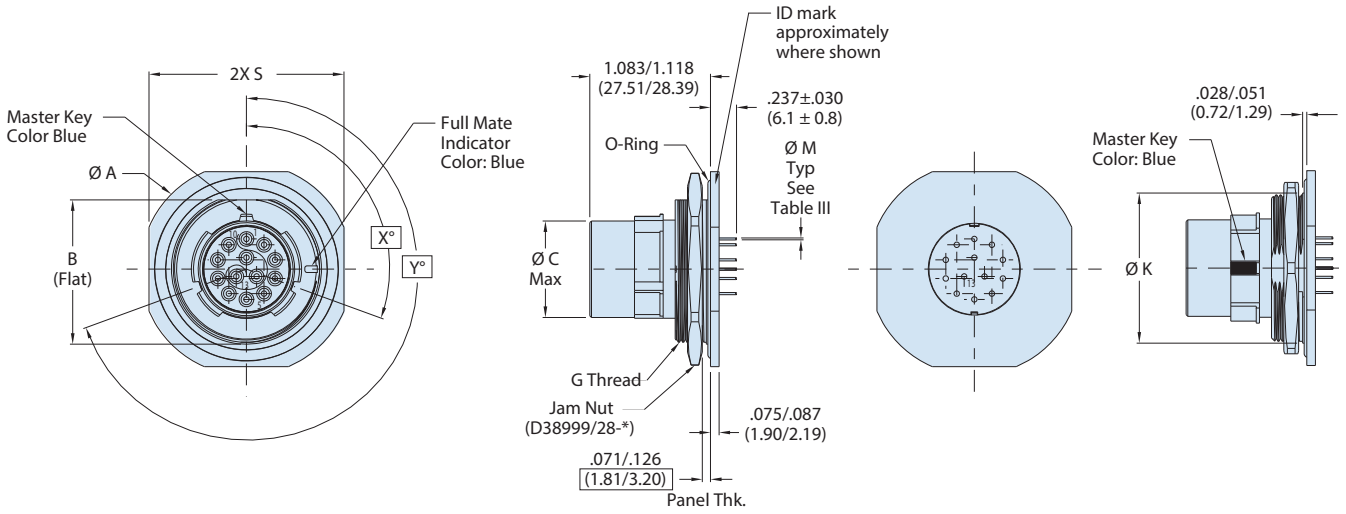

Jam-Nut Receptacle
(REF: MIL-DTL-38999/44)

Shell Size	Shell Size Code	ØA	B (Flat)	ØC Max	G Thread	ØK	S	O-Ring P/N
11	B	1.520 (38.6) 1.480 (37.6)	.942 (23.93) .935 (23.74)	.509 (12.93)	M25 1.0-6g 0.100R	1.000 (25.40) .990 (25.15)	1.394 (35.4) 1.354 (34.4)	AS3582-024
13	C	1.642 (41.7) 1.602 (40.7)	1.066 (27.08) 1.059 (26.89)	.634 (16.10)	M28 1.0-6g 0.100R	1.125 (28.58) 1.115 (28.33)	1.520 (38.6) 1.480 (37.6)	AS3582-026
15	D	1.768 (44.9) 1.728 (43.9)	1.191 (30.26) 1.184 (30.07)	.759 (19.28)	M31 1.0-6g 0.100R	1.250 (31.75) 1.240 (31.50)	1.642 (41.7) 1.602 (40.7)	AS3582-028
17	E	1.957 (49.7) 1.917 (48.7)	1.321 (33.56) 1.314 (33.37)	.885 (22.48)	M34 1.0-6g 0.100R	1.375 (34.92) 1.365 (34.67)	1.799 (45.7) 1.760 (44.7)	AS3582-029
19	F	2.035 (51.7) 1.996 (50.7)	1.441 (36.61) 1.434 (36.42)	1.009 (25.63)	M38 1.0-6g 0.100R	1.500 (38.10) 1.490 (37.85)	1.909 (48.5) 1.870 (47.5)	AS3582-030
21	G	2.157 (54.8) 2.118 (53.8)	1.566 (39.78) 1.559 (39.59)	1.134 (28.80)	M41 1.0-6g 0.100R	1.625 (41.28) 1.615 (41.03)	2.035 (51.7) 1.996 (50.7)	AS3582-031
23	H	2.283 (58.0) 2.244 (57.0)	1.691 (42.96) 1.684 (42.77)	1.259 (31.98)	M44 1.0-6g 0.100R	1.750 (44.45) 1.740 (44.20)	2.157 (54.8) 2.118 (53.8)	AS3582-032
25	J	2.409 (61.2) 2.370 (60.2)	1.816 (46.13) 1.809 (45.94)	1.384 (35.15)	M47 1.0-6g 0.100R	1.875 (47.63) 1.865 (47.38)	2.283 (58.0) 2.244 (57.0)	AS3582-033

NOTES

1. Material/Finish:
   - Shell Finish - See Table I
   - Insulator - High Grade Rigid Dielectric
   - Contacts - Copper Alloy
   - Potting - Epoxy.
2. Insert arrangement in accordance with MIL-STD-1560. Contact factory for additional insert arrangements.
3. Insert arrangement shown is for reference only.
4. Glenair 234-207-07 series connectors are designed to meet the applicable performance and interface requirements of MIL-DTL-38999, Series IV except as noted. Connector mates with any QPL manufacturer's MIL-DTL-38999 Series IV connectors with the same size insert, arrangement, and polarization.
5. Glenair's 234-207-07 receptacle connector is designed to withstand a minimum of 1500 mating durability cycles when mate to a "Super Nine" plug and appropriate contacts finish should be the same for both mating connectors to optimize performance.

MIL-DTL-38999 Series IV Type
234-208 Panel mount receptacles with PC tails, stepped contacts

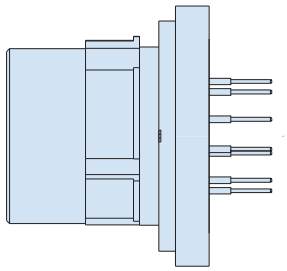

HOW TO ORDER								
Sample Part Number	**234-208**	**-D0**	**NF**	**11**	**-35**	**P**	**N**	
Basic Part Number	**234-208**							
Connector Style	**D0** - Receptacle, wall-mount through holes **HM** = Receptacle, wall-mount w/metric helicoil **HS** = Receptacle, wall-mount w/standard helicoil							
Material/Finish	(See Table I)							
Shell Size	**11**, **13**, **15**, **17**, **19**, **21**, **23**, **25**							
Insert Arrangement	PER MIL-STD-1560							
Insert Designator	**P** = Pin Contacts, Gold Plate, 1500 Cycles **S** = Socket Contact Gold Plate, 1500 Cycles **H** = Pin Contacts Pd/Ni, 1500 Cycles **J** = Socket Contact Pd/Ni, 1500 Cycles							
Alternate Polarization	**A**, **B**, **C**, **D**, **K**, **L**, **M**, **R**, **N** = Normal, **U** = Universal (Glenair Equivalent Only)							

"BETTER-THAN-QPL" FEATURES AND BENEFITS

- Secure breech-lock mating connector meets D38999 shock and vibe
- Glenair Signature Tin Zinc finish class is RoHS compliant and cadmium compatible
- Precision-machined key/keyway polarization for reliable mismating protection
- Scoop-proof design prevents pin damage and short circuits
- Fully tooled for all MIL-STD-1560 insert arrangements
- Contact options include size #22D, #20, #16, and #12 (see High-Speed series for Size #8)
- 500 mating cycles exceeds MIL-DTL-38999 specification

TABLE I - MATERIAL/FINISH

Equiv Class	Sym	Material	Finish
W	**NF**	Aluminum Alloy	Cad/O.D. over Electroless Nickel
G*	**MA****		Electroless Nickel, Matte
T*	**MT**		Nickel-PTFE
F	**ME**		Electroless Nickel
AA	**MN**		MegaNickel
V	**TZ**		Tin-Zinc
Z*	**ZR**		Zinc Ni, Black (Tri-Valent CR)
K*	**Z1**	Stainless Steel	Passivate
L*	**ZL**		Electrodeposited Nickel

* = Glenair Equivalent Only

** = Connectors for space applications must be ordered with "MA" finish and mod code "-186T" to conform to the thermal vacuum outgassing requirements of class G.

TABLE II - POLARIZING POSITIONS

	N	A	B	C	D	K	L	M	R	U
X	110°	100°	90°	80°	70°	120°	120°	120°	120°	N/A
Y	250°	260°	270°	280°	290°	255°	265°	275°	285°	N/A

TABLE III

Contact Size	PC Tail ØM	PC Tail ØN
#23	.020 (0.51) .018 (0.46)	
#22	.020 (0.51) .018 (0.46)	.050 (1.27) .044 (1.12)
#20	.030 (0.76) .028 (0.71)	.060 (1.52) .054 (1.37)
#16	.040 (1.02) .038 (0.97)	.076 (1.93) .070 (1.78)
#12	.072 (1.83) .070 (1.78)	.106 (2.69) .100 (2.54)

© 2025 Glenair, Inc • 1211 Air Way, Glendale, CA 91201 • 818-247-6000 • www.glenair.com • U.S. CAGE code 06324 • SuperNine Series IV
Dimensions in Inches (millimeters) are subject to change without notice.

MIL-DTL-38999 Series IV Type
234-208 Panel mount receptacles with PC tails, stepped contacts

WALL MOUNT RECEPTACLE 234-208-D0

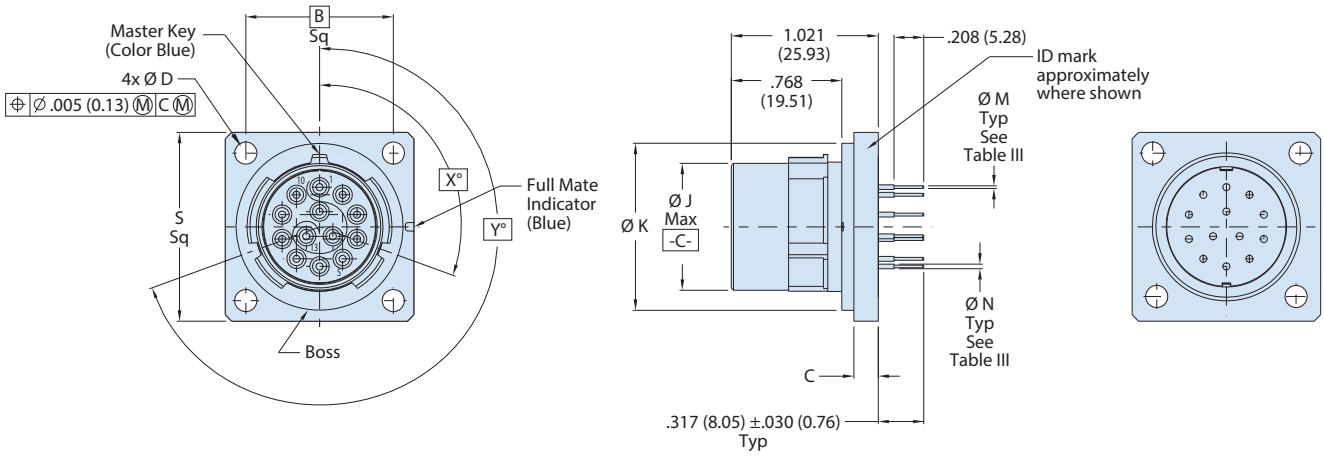

D0 WALL MOUNT
THRU HOLE

Shell Size	Shell Size Code	B Bsc	C	C'	Ø D	Ø J Max	Ø K	L Thread	L'Thread	S	S'
11	B	.812 (20.62)	.102 (2.6) .083 (2.1)	.179 (4.5) .140 (3.6)	.138 (3.5) .122 (3.1)	.509 (12.93)	.793 (20.15) .778 (19.76)	.112-40 UNC	M3 X 0.5	1.051 (26.7) 1.008 (25.6)	1.202 (30.5) 1.162 (29.5)
13	C	.906 (23.02)	.102 (2.6) .083 (2.1)		.138 (3.5) .122 (3.1)	.634 (16.10)	.913 (23.35) .904 (22.96)			1.146 (29.1) 1.102 (28.0)	1.296 (32.8) 1.256 (31.9)
15	D	.969 (24.61)	.102 (2.6) .083 (2.1)		.138 (3.5) .122 (3.1)	.759 (19.28)	1.044 (26.52) 1.029 (26.13)			1.240 (31.5) 1.197 (30.4)	1.359 (34.5) 1.319 (33.5)
17	E	1.062 (26.98)	.102 (2.6) .083 (2.1)		.138 (3.5) .122 (3.1)	.885 (22.48)	1.170 (29.72) 1.155 (29.33)			1.335 (33.9) 1.291 (32.8)	1.452 (36.9) 1.412 (35.9)
19	F	1.156 (29.36)	.102 (2.6) .083 (2.1)		.138 (3.5) .122 (3.1)	1.009 (25.63)	1.294 (32.87) 1.279 (32.48)			1.461 (37.1) 1.417 (36.0)	1.546 (39.3) 1.506 (38.3)
21	G	1.250 (31.76)	.134 (3.4) .114 (2.9)		.138 (3.5) .122 (3.1)	1.134 (28.80)	1.419 (36.05) 1.404 (35.66)			1.583 (40.2) 1.539 (39.1)	1.640 (41.7) 1.600 (40.6)
23	H	1.375 (34.93)	.134 (3.4) .114 (2.9)	.190 (4.8) .170 (4.3)	.157 (4.0) .142 (3.6)	1.259 (31.98)	1.544 (39.22) 1.529 (38.83)	.138-32 UNC	M4 X 0.7	1.709 (43.4) 1.665 (42.3)	1.765 (44.8) 1.725 (43.8)
25	J	1.500 (38.10)	.134 (3.4) .114 (2.9)		.157 (4.0) .142 (3.6)	1.384 (35.15)	1.669 (42.40) 1.654 (42.01)			1.835 (46.6) 1.791 (45.5)	1.890 (48.0) 1.850 (47.0)

TABLE IV - PANEL CUT-OUT

Shell Size	Shell Size Code	ØKK Min	BB Bsc	ØDD	ØLL Min
11	B	0.796 (20.22)	0.812 (20.62)	.133/.123	0.625 (15.88)
13	C	0.922 (23.42)	0.906 (23.01)		0.750 (19.05)
15	D	1.047 (26.59)	0.969 (24.61)		0.906 (23.01)
17	E	1.219 (30.96)	1.062 (26.97)		1.016 (25.81)
19	F	1.297 (32.94)	1.156 (29.36)		1.141 (28.98)
21	G	1.422 (36.12)	1.250 (31.75)		1.266 (32.16)
23	H	1.547 (39.29)	1.375 (34.93)	.159/.149	1.375 (34.93)
25	J	1.672 (42.47)	1.500 (38.10)	.155/.145	1.484 (37.69)

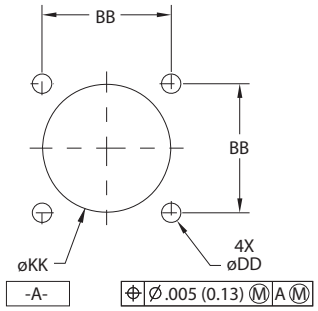

MIL-DTL-38999 Series IV Type
234-208 Panel mount receptacles with PC tails, stepped contacts

WALL MOUNT RECEPTACLE 234-208 -HS

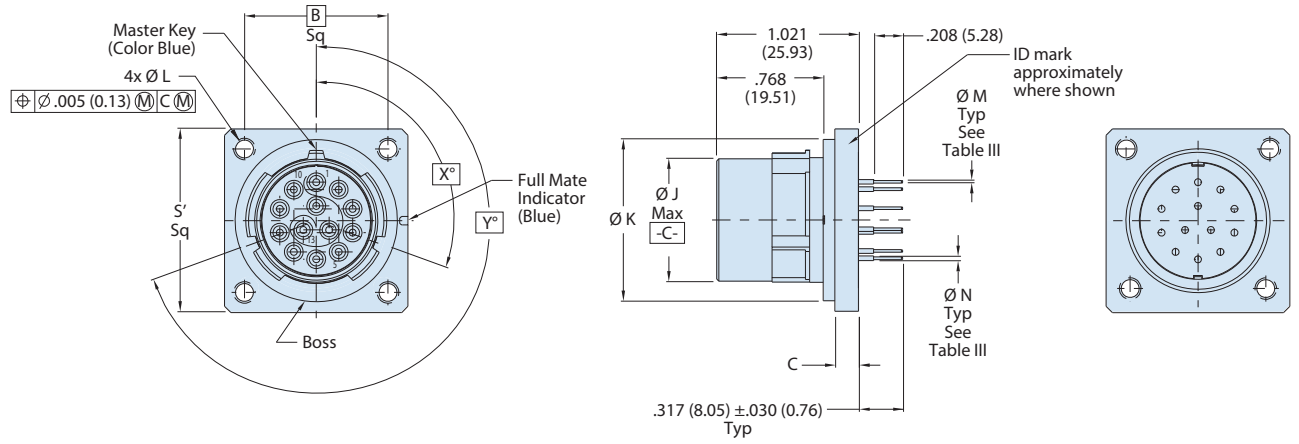

HS WALL MOUNT
STANDARD HELICOIL

WALL MOUNT RECEPTACLE 234-208 -HM

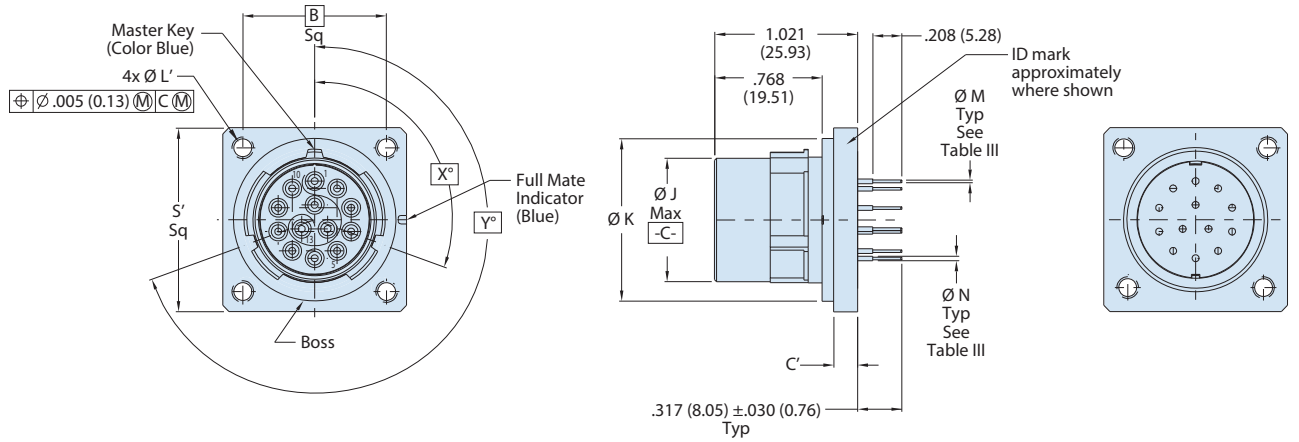

HM WALL MOUNT
METRIC HELICOIL

NOTES

1. Material/Finish:
   - Shell Finish - See Table I
   - Insulator - High Grade Rigid Dielectric
   - Contacts - Copper Alloy
   - Potting - Epoxy.
2. Insert arrangement in accordance with MIL-STD-1560. Contact factory for additional insert arrangements.
3. Insert arrangement shown is for reference only.
4. Glenair 234-208 series connectors are designed to meet the applicable performance and interface requirements of MIL-DTL-38999, Series IV except as noted. Connector mates with any QPL manufacturer's MIL-DTL-38999 Series IV connectors with the same size insert, arrangement, and polarization.
5. Glenair's 234-208 receptacle connector is designed to withstand a minimum of 1500 mating durability cycles when mate to a "Super Nine" plug and appropriate contacts finish should be the same for both mating connectors to optimize performance.

© 2025 Glenair, Inc • 1211 Air Way, Glendale, CA 91201 • 818-247-6000 • www.glenair.com • U.S. CAGE code 06324 • SuperNine Series IV
Dimensions in Inches (millimeters) are subject to change without notice.

MIL-DTL-38999 Series IV Type
234-208-07 Jam nut receptacle with PC tails, stepped contacts

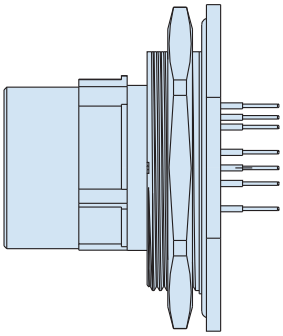

HOW TO ORDER							
Sample Part Number	234-208	-07	NF	11	-35	P	N

Basic Part Number	**234-208**
Connector Style	07- Receptacle, Jam Nut
Material/Finish	(See Table I)
Shell Size	**11**, **13**, **15**, **17**, **19**, **21**, **23**, **25**
Insert Arrangement	PER MIL-STD-1560
Insert Designator	**P** = Pin Contacts, Gold Plate, 1500 Cycles **S** = Socket Contact Gold Plate, 1500 Cycles **H** = Pin Contacts Pd/Ni, 1500 Cycles **J** = Socket Contact Pd/Ni, 1500 Cycles
Alternate Polarization	**A**, **B**, **C**, **D**, **K**, **L**, **M**, **R**, **N** = Normal, **U** = Universal (Glenair Equivalent Only)

TABLE I - MATERIAL/FINISH

Equiv Class	Sym	Material	Finish
W	**NF**	Aluminum Alloy	Cad/O.D. over Electroless Nickel
G*	**MA****		Electroless Nickel, Matte
T*	**MT**		Nickel-PTFE
F	**ME**		Electroless Nickel
AA	**MN**		MegaNickel
V	**TZ**		Tin-Zinc
Z*	**ZR**		Zinc Ni, Black (Tri-Valent CR)
K*	**Z1**	Stainless Steel	Passivate
L*	**ZL**		Electrodeposited Nickel

* = Glenair Equivalent Only

** = Connectors for space applications must be ordered with "MA" finish and mod code "-186T" to conform to the thermal vacuum outgassing requirements of class G.

TABLE III

Contact Size	PC Tail ØM
#23	.020 .018
#22	.020 .018
#20	.030 .028
#16	.040 .038
#12	.072 .070

"BETTER-THAN-QPL" FEATURES AND BENEFITS

- Secure breech-lock mating connector meets D38999 shock and vibe
- Glenair Signature Tin Zinc finish class is RoHS compliant and cadmium compatible
- Precision-machined key/keyway polarization for reliable mismating protection
- Scoop-proof design prevents pin damage and short circuits
- Fully tooled for all MIL-STD-1560 insert arrangements
- Contact options include size #22D, #20, #16, and #12 (see High-Speed series for Size #8)
- 500 mating cycles exceeds MIL-DTL-38999 specification

TABLE IV - POLARIZING POSITIONS

	N	A	B	C	D	K	L	M	R	U
X	110°	100°	90°	80°	70°	120°	120°	120°	120°	N/A
Y	250°	260°	270°	280°	290°	255°	265°	275°	285°	N/A

TABLE V - PANEL CUT-OUT

Shell Size	Shell Size Code	ØKK	BB
11	B	1.020 (25.91) 1.010 (25.65)	0.955 (24.26) 0.945 (24.00)
13	C	1.145 (29.08) 1.135 (28.83)	1.085 (27.56) 1.075 (27.31)
15	D	1.270 (32.26) 1.260 (32.00)	1.210 (30.73) 1.200 (30.48)
17	E	1.395 (35.43) 1.385 (35.18)	1.335 (33.91) 1.325 (33.66)
19	F	1.520 (38.61) 1.510 (38.35)	1.460 (37.08) 1.450 (36.83)
21	G	1.645 (41.78) 1.635 (41.53)	1.585 (40.26) 1.575 (40.01)
23	H	1.770 (44.96) 1.760 (44.70)	1.710 (43.43) 1.700 (43.18)
25	J	1.895 (48.13) 1.885 (47.88)	1.835 (46.61) 1.825 (46.36)

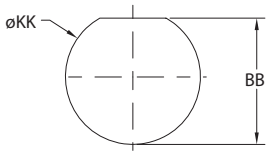

Jam-Nut Receptacle
Recommended panel cut-out

MIL-DTL-38999 Series IV Type
234-208-07 Jam nut receptacle with PC tails, stepped contacts

TABLE II - JAM NUT RECEPTACLE 234-208-07

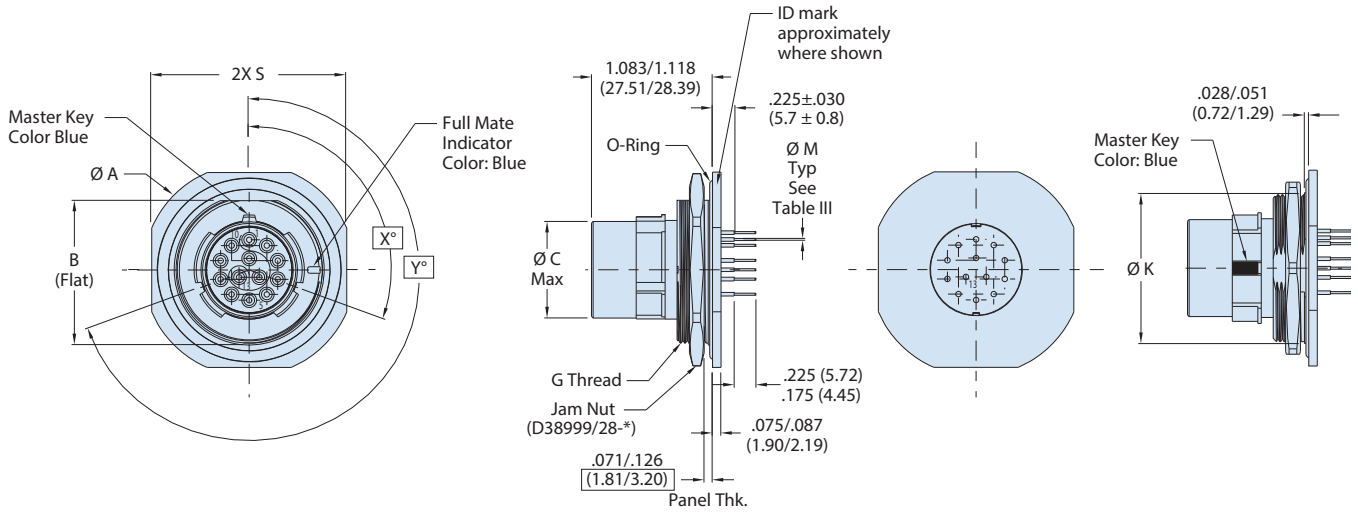

Jam-Nut Receptacle
(REF: MIL-DTL-38999/44)

Shell Size	Shell Size Code	ØA	B (Flat)	ØC Max	G Thread	ØK	S	O-Ring P/N
11	B	1.520 (38.6) 1.480 (37.6)	.942 (23.93) .935 (23.74)	.509 (12.93)	M25 1.0-6g 0.100R	1.000 (25.40) .990 (25.15)	1.394 (35.4) 1.354 (34.4)	AS3582-024
13	C	1.642 (41.7) 1.602 (40.7)	1.066 (27.08) 1.059 (26.89)	.634 (16.10)	M28 1.0-6g 0.100R	1.125 (28.58) 1.115 (28.33)	1.520 (38.6) 1.480 (37.6)	AS3582-026
15	D	1.768 (44.9) 1.728 (43.9)	1.191 (30.26) 1.184 (30.07)	.759 (19.28)	M31 1.0-6g 0.100R	1.250 (31.75) 1.240 (31.50)	1.642 (41.7) 1.602 (40.7)	AS3582-028
17	E	1.957 (49.7) 1.917 (48.7)	1.321 (33.56) 1.314 (33.37)	.885 (22.48)	M34 1.0-6g 0.100R	1.375 (34.92) 1.365 (34.67)	1.799 (45.7) 1.760 (44.7)	AS3582-029
19	F	2.035 (51.7) 1.996 (50.7)	1.441 (36.61) 1.434 (36.42)	1.009 (25.63)	M38 1.0-6g 0.100R	1.500 (38.10) 1.490 (37.85)	1.909 (48.5) 1.870 (47.5)	AS3582-030
21	G	2.157 (54.8) 2.118 (53.8)	1.566 (39.78) 1.559 (39.59)	1.134 (28.80)	M41 1.0-6g 0.100R	1.625 (41.28) 1.615 (41.03)	2.035 (51.7) 1.996 (50.7)	AS3582-031
23	H	2.283 (58.0) 2.244 (57.0)	1.691 (42.96) 1.684 (42.77)	1.259 (31.98)	M44 1.0-6g 0.100R	1.750 (44.45) 1.740 (44.20)	2.157 (54.8) 2.118 (53.8)	AS3582-032
25	J	2.409 (61.2) 2.370 (60.2)	1.816 (46.13) 1.809 (45.94)	1.384 (35.15)	M47 1.0-6g 0.100R	1.875 (47.63) 1.865 (47.38)	2.283 (58.0) 2.244 (57.0)	AS3582-033

NOTES

1. Material/Finish:
   - Shell Finish - See Table I
   - Insulator - High Grade Rigid Dielectric
   - Contacts - Copper Alloy
   - Potting - Epoxy.
2. Insert arrangement in accordance with MIL-STD-1560. Contact factory for additional insert arrangements.
3. Insert arrangement shown is for reference only.
4. Glenair 234-208-07 series connectors are designed to meet the applicable performance and interface requirements of MIL-DTL-38999, Series IV except as noted. Connector mates with any QPL manufacturer's MIL-DTL-38999 Series IV connectors with the same size insert, arrangement, and polarization.
5. Glenair's 234-208-07 receptacle connector is designed to withstand a minimum of 1500 mating durability cycles when mate to a "Super Nine" plug and appropriate contacts finish should be the same for both mating connectors to optimize performance.

© 2025 Glenair, Inc • 1211 Air Way, Glendale, CA 91201 • 818-247-6000 • www.glenair.com • U.S. CAGE code 06324 • SuperNine Series IV
Dimensions in Inches (millimeters) are subject to change without notice.

MIL-DTL-38999 Series IV Type
234-209 Panel mount receptacles with PC tails, "washout" standoff

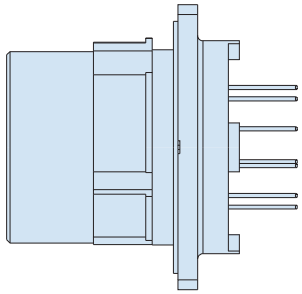

HOW TO ORDER

Sample Part Number	234-209	-D0	NF	11	-35	P	N

Basic Part Number	**234-209**
Connector Style	**D0** = Receptacle, wall-mount through holes **HM** = Receptacle, wall-mount w/metric helicoil **HS** = Receptacle, wall-mount w/standard helicoil **CM** = Receptacle, wall-mount w/metric clinch nut **CS** = Receptacle, wall-mount w/standard clinch nut
Material/Finish	(See Table I)
Shell Size	**11**, **13**, **15**, **17**, **19**, **21**, **23**, **25**
Insert Arrangement	PER MIL-STD-1560
Insert Designator	**P** = Pin Contacts, Gold Plate, 1500 Cycles **S** = Socket Contact Gold Plate, 1500 Cycles **H** = Pin Contacts Pd/Ni, 1500 Cycles **J** = Socket Contact Pd/Ni, 1500 Cycles
Alternate Polarization	**A, B, C, D, K, L, M, R, N** = Normal, **U** = Universal (Glenair Equivalent Only)

"BETTER-THAN-QPL" FEATURES AND BENEFITS

- Secure breech-lock mating connector meets D38999 shock and vibe
- Glenair Signature Tin Zinc finish class is RoHS compliant and cadmium compatible
- Precision-machined key/keyway polarization for reliable mismating protection
- Scoop-proof design prevents pin damage and short circuits
- Fully tooled for all MIL-STD-1560 insert arrangements
- Contact options include size #22D, #20, #16, and #12 (see High-Speed series for Size #8)
- 500 mating cycles exceeds MIL-DTL-38999 specification

TABLE I - MATERIAL/FINISH

Equiv Class	Sym	Material	Finish
W	**NF**	Aluminum Alloy	Cad/O.D. over Electroless Nickel
G*	**MA****		Electroless Nickel, Matte
T*	**MT**		Nickel-PTFE
F	**ME**		Electroless Nickel
AA	**MN**		MegaNickel
V	**TZ**		Tin-Zinc
Z*	**ZR**		Zinc Ni, Black (Tri-Valent CR)
K*	**Z1**	Stainless Steel	Passivate
L*	**ZL**		Electrodeposited Nickel

* = Glenair Equivalent Only

** = Connectors for space applications must be ordered with "MA" finish and mod code "-186T" to conform to the thermal vacuum outgassing requirements of class G.

TABLE II - POLARIZING POSITIONS

	N	A	B	C	D	K	L	M	R	U
X	110°	100°	90°	80°	70°	120°	120°	120°	120°	N/A
Y	250°	260°	270°	280°	290°	255°	265°	275°	285°	N/A

TABLE III

Contact Size	PC Tail ØM
#23	.020 (0.51) .018 (0.46)
#22	.020 (0.51) .018 (0.46)
#20	.030 (0.76) .028 (0.71)
#16	.040 (1.02) .038 (0.97)
#12	.072 (1.83) .070 (1.78)

MIL-DTL-38999 Series IV Type
234-209 Panel mount receptacles with PC tails, "washout" standoff

WALL MOUNT RECEPTACLE 234-209-D0

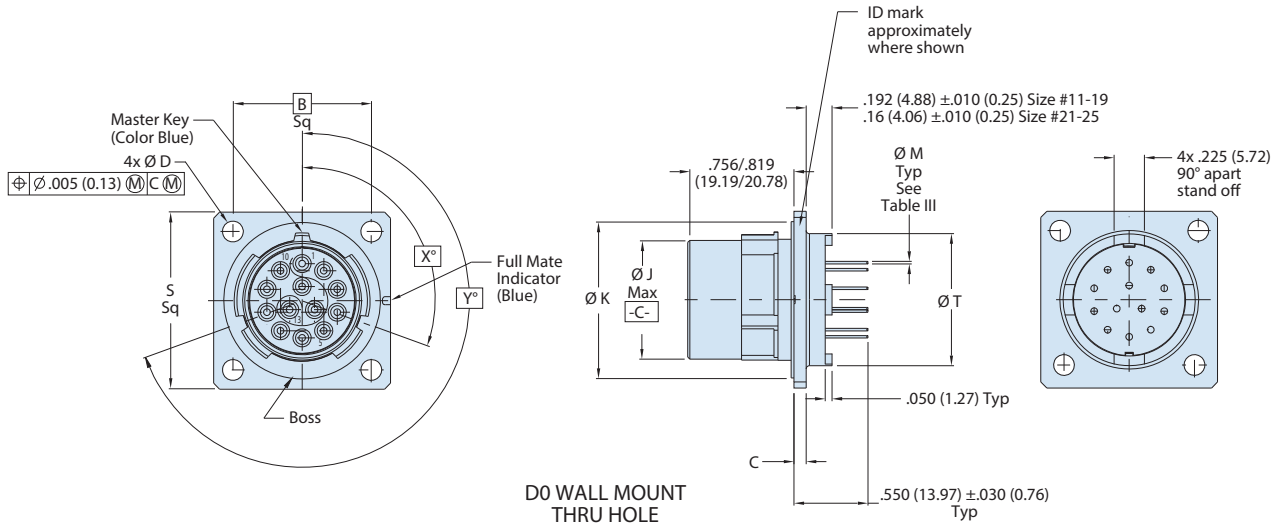

Shell Size	Shell Size Code	B Bsc	C	C′	Ø D	Ø J Max	Ø K	L Thread	L′Thread	S	S′	ØT
11	B	.812 (20.62)	.102 (2.6) .083 (2.1)	.179 (4.5) .140 (3.6)	.138 (3.5) .122 (3.1)	.509 (12.93)	.793 (20.15) .778 (19.76)	.112-40 UNC	M3 X 0.5	1.051 (26.7) 1.008 (25.6)	1.202 (30.5) 1.162 (29.5)	.585 (14.9)
13	C	.906 (23.02)	.102 (2.6) .083 (2.1)		.138 (3.5) .122 (3.1)	.634 (16.10)	.913 (23.35) .904 (22.96)			1.146 (29.1) 1.102 (28.0)	1.296 (32.8) 1.256 (31.9)	.704 (17.9)
15	D	.969 (24.61)	.102 (2.6) .083 (2.1)		.138 (3.5) .122 (3.1)	.759 (19.28)	1.044 (26.52) 1.029 (26.13)			1.240 (31.5) 1.197 (30.4)	1.359 (34.5) 1.319 (33.5)	.861 (21.9)
17	E	1.062 (26.98)	.102 (2.6) .083 (2.1)		.138 (3.5) .122 (3.1)	.885 (22.48)	1.170 (29.72) 1.155 (29.33)			1.335 (33.9) 1.291 (32.8)	1.452 (36.9) 1.412 (35.9)	.980 (24.9)
19	F	1.156 (29.36)	.102 (2.6) .083 (2.1)		.138 (3.5) .122 (3.1)	1.009 (25.63)	1.294 (32.87) 1.279 (32.48)			1.461 (37.1) 1.417 (36.0)	1.546 (39.3) 1.506 (38.3)	1.097 (27.9)
21	G	1.250 (31.76)	.134 (3.4) .114 (2.9)		.138 (3.5) .122 (3.1)	1.134 (28.80)	1.419 (36.05) 1.404 (35.66)			1.583 (40.2) 1.539 (39.1)	1.640 (41.7) 1.600 (40.6)	1.215 (30.9)
23	H	1.375 (34.93)	.134 (3.4) .114 (2.9)	.190 (4.8) .170 (4.3)	.157 (4.0) .142 (3.6)	1.259 (31.98)	1.544 (39.22) 1.529 (38.83)	.138-32 UNC	M4 X 0.7	1.709 (43.4) 1.665 (42.3)	1.765 (44.8) 1.725 (43.8)	1.332 (33.8)
25	J	1.500 (38.10)	.134 (3.4) .114 (2.9)		.157 (4.0) .142 (3.6)	1.384 (35.15)	1.669 (42.40) 1.654 (42.01)			1.835 (46.6) 1.791 (45.5)	1.890 (48.0) 1.850 (47.0)	1.451 (36.9)

TABLE IV - PANEL CUT-OUT

Shell Size	Shell Size Code	ØKK Min	BB Bsc	ØDD	ØLL Min
11	B	0.796 (20.22)	0.812 (20.62)	.133 (3.38) /.123 (3.12)	0.625 (15.88)
13	C	0.922 (23.42)	0.906 (23.01)		0.750 (19.05)
15	D	1.047 (26.59)	0.969 (24.61)		0.906 (23.01)
17	E	1.219 (30.96)	1.062 (26.97)		1.016 (25.81)
19	F	1.297 (32.94)	1.156 (29.36)		1.141 (28.98)
21	G	1.422 (36.12)	1.250 (31.75)		1.266 (32.16)
23	H	1.547 (39.29)	1.375 (34.93)	.159 (4.04) / .149 (3.78)	1.375 (34.93)
25	J	1.672 (42.47)	1.500 (38.10)	.155 (3.94) / .145 (3.68)	1.484 (37.69)

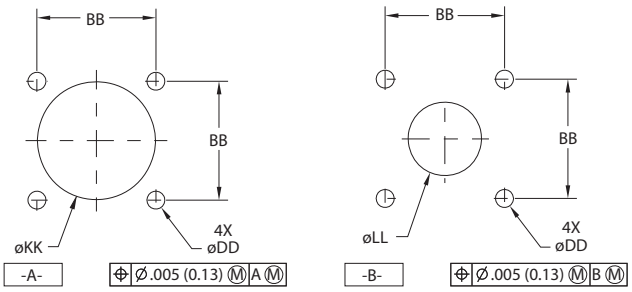

© 2025 Glenair, Inc • 1211 Air Way, Glendale, CA 91201 • 818-247-6000 • www.glenair.com • U.S. CAGE code 06324 • SuperNine Series IV
Dimensions in Inches (millimeters) are subject to change without notice.

MIL-DTL-38999 Series IV Type
234-209 Panel mount receptacles with PC tails, "washout" standoff

WALL MOUNT RECEPTACLE 234-209 -HS

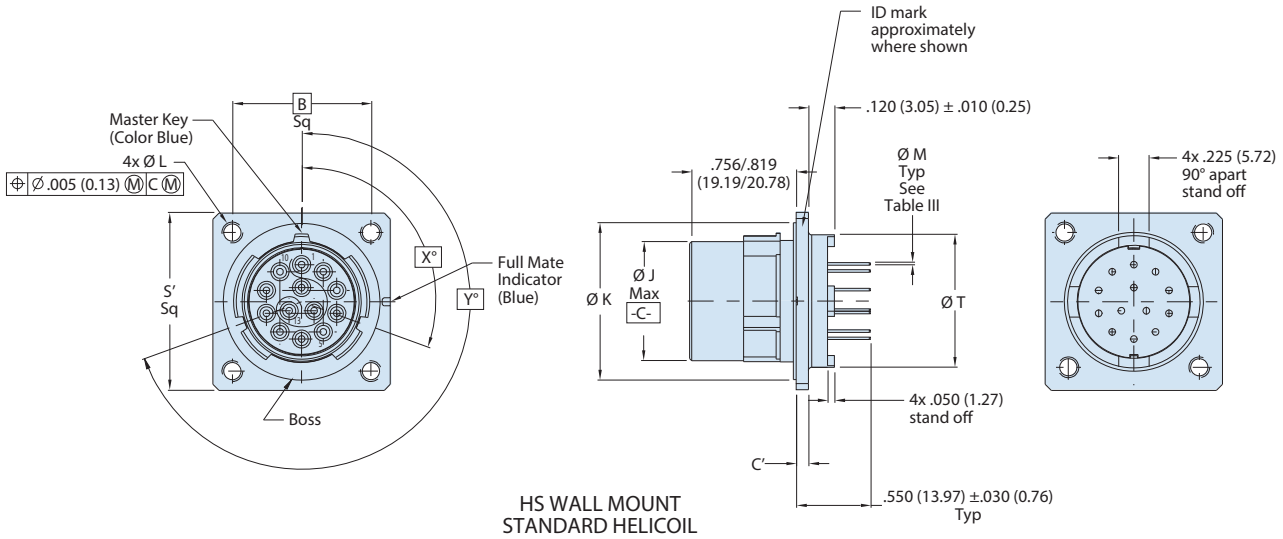

HS WALL MOUNT
STANDARD HELICOIL

WALL MOUNT RECEPTACLE 234-209 -HM

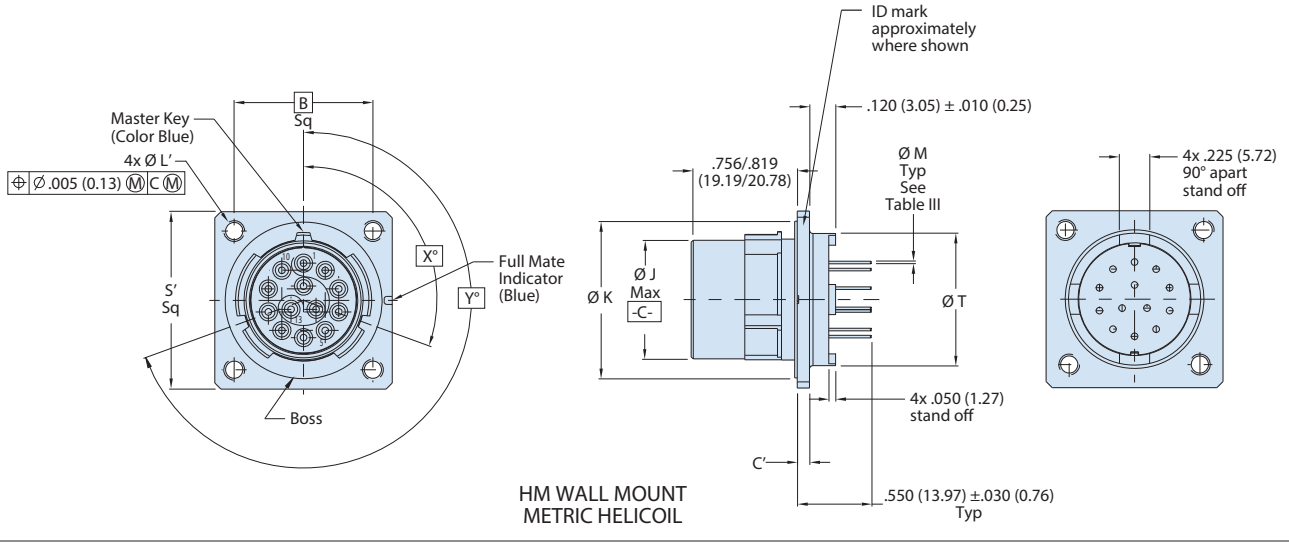

HM WALL MOUNT
METRIC HELICOIL

NOTES

1. Material/Finish:
   - Shell Finish - See Table I
   - Insulator - High Grade Rigid Dielectric
   - Contacts - Copper Alloy
   - Potting - Epoxy.
2. Insert arrangement in accordance with MIL-STD-1560. Contact factory for additional insert arrangements.
3. Insert arrangement shown is for reference only.
4. Glenair 234-209 series connectors are designed to meet the applicable performance and interface requirements of MIL-DTL-38999, Series IV except as noted. Connector mates with any QPL manufacturer's MIL-DTL-38999 Series IV connectors with the same size insert, arrangement, and polarization.
5. Glenair's 234-209 receptacle connector is designed to withstand a minimum of 1500 mating durability cycles when mate to a "Super Nine" plug and appropriate contacts finish should be the same for both mating connectors to optimize performance.

MIL-DTL-38999 Series IV Type
234-209-07 Jam nut receptacle with PC tails, "washout" standoff

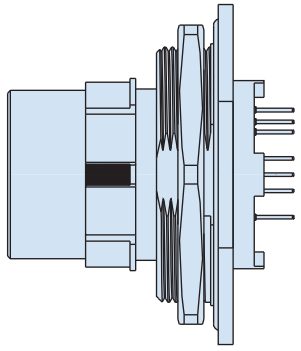

HOW TO ORDER								
Sample Part Number	234-209	-07	NF	11	-35	P	N	
Basic Part Number	**234-209**							
Connector Style	07- Receptacle, Jam Nut							
Material/Finish	(See Table I)							
Shell Size	**11**, **13**, **15**, **17**, **19**, **21**, **23**, **25**							
Insert Arrangement	PER MIL-STD-1560							
Insert Designator	**P** = Pin Contacts, Gold Plate, 1500 Cycles **S** = Socket Contact Gold Plate, 1500 Cycles **H** = Pin Contacts Pd/Ni, 1500 Cycles **J** = Socket Contact Pd/Ni, 1500 Cycles							
Alternate Polarization	**A**, **B**, **C**, **D**, **K**, **L**, **M**, **R**, **N** = Normal, **U** = Universal (Glenair Equivalent Only)							

TABLE I - MATERIAL/FINISH

Equiv Class	Sym	Material	Finish
W	**NF**	Aluminum Alloy	Cad/O.D. over Electroless Nickel
G*	**MA****		Electroless Nickel, Matte
T*	**MT**		Nickel-PTFE
F	**ME**		Electroless Nickel
AA	**MN**		MegaNickel
V	**TZ**		Tin-Zinc
Z*	**ZR**		Zinc Ni, Black (Tri-Valent CR)
K*	**Z1**	Stainless Steel	Passivate
L*	**ZL**		Electrodeposited Nickel

* = Glenair Equivalent Only

** = Connectors for space applications must be ordered with "MA" finish and mod code "-186T" to conform to the thermal vacuum outgassing requirements of class G.

TABLE III

Contact Size	PC Tail ØM
#23	.020 (0.51) .018 (0.46)
#22	.020 (0.51) .018 (0.46)
#20	.030 (0.76) .028 (0.71)
#16	.040 (1.02) .038 (0.97)
#12	.072 (1.83) .070 (1.78)

TABLE IV - POLARIZING POSITIONS

	N	A	B	C	D	K	L	M	R	U
X	110°	100°	90°	80°	70°	120°	120°	120°	120°	N/A
Y	250°	260°	270°	280°	290°	255°	265°	275°	285°	N/A

TABLE V - PANEL CUT-OUT

Shell Size	Shell Size Code	ØKK	BB
11	B	1.020 (25.91) 1.010 (25.65)	0.955 (24.26) 0.945 (24.00)
13	C	1.145 (29.08) 1.135 (28.83)	1.085 (27.56) 1.075 (27.31)
15	D	1.270 (32.26) 1.260 (32.00)	1.210 (30.73) 1.200 (30.48)
17	E	1.395 (35.43) 1.385 (35.18)	1.335 (33.91) 1.325 (33.66)
19	F	1.520 (38.61) 1.510 (38.35)	1.460 (37.08) 1.450 (36.83)
21	G	1.645 (41.78) 1.635 (41.53)	1.585 (40.26) 1.575 (40.01)
23	H	1.770 (44.96) 1.760 (44.70)	1.710 (43.43) 1.700 (43.18)
25	J	1.895 (48.13) 1.885 (47.88)	1.835 (46.61) 1.825 (46.36)

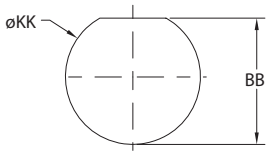

Jam-Nut Receptacle
Recommended panel cut-out

"BETTER-THAN-QPL" FEATURES AND BENEFITS

- Secure breech-lock mating connector meets D38999 shock and vibe
- Glenair Signature Tin Zinc finish class is RoHS compliant and cadmium compatible
- Precision-machined key/keyway polarization for reliable mismating protection
- Scoop-proof design prevents pin damage and short circuits
- Fully tooled for all MIL-STD-1560 insert arrangements
- Contact options include size #22D, #20, #16, and #12 (see High-Speed series for Size #8)
- 500 mating cycles exceeds MIL-DTL-38999 specification

© 2025 Glenair, Inc • 1211 Air Way, Glendale, CA 91201 • 818-247-6000 • www.glenair.com • U.S. CAGE code 06324 • SuperNine Series IV
Dimensions in Inches (millimeters) are subject to change without notice.

MIL-DTL-38999 Series IV Type
234-209-07 Panel mount and Jam nut receptacles with PC tails, "washout" standoff

TABLE II - JAM NUT RECEPTACLE 234-209-07

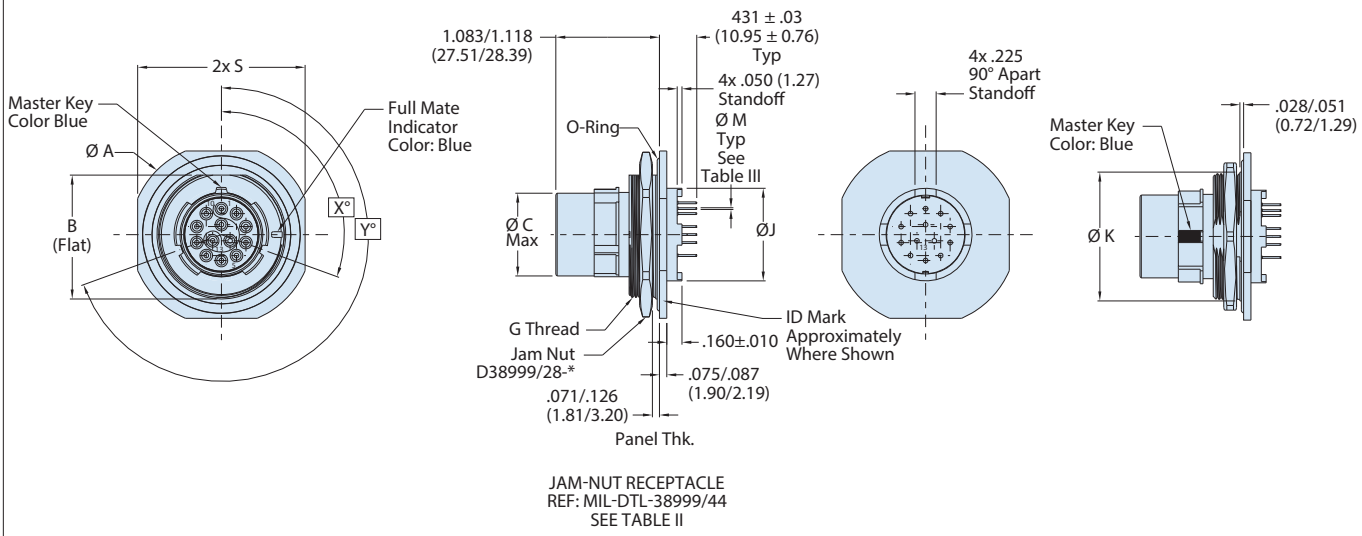

Shell Size	Shell Size Code	ØA	B (Flat)	ØC Max	G Thread	ØJ ±.010 (.254)	ØK	S	O-Ring P/N
11	B	1.520 (38.6) 1.480 (37.6)	.942 (23.93) .935 (23.74)	.509 (12.93)	M25 1.0-6g 0.100R	.585 (14.86)	1.000 (25.40) .990 (25.15)	1.394 (35.4) 1.354 (34.4)	AS3582-024
13	C	1.642 (41.7) 1.602 (40.7)	1.066 (27.08) 1.059 (26.89)	.634 (16.10)	M28 1.0-6g 0.100R	.699 (17.75)	1.125 (28.58) 1.115 (28.33)	1.520 (38.6) 1.480 (37.6)	AS3582-026
15	D	1.768 (44.9) 1.728 (43.9)	1.191 (30.26) 1.184 (30.07)	.759 (19.28)	M31 1.0-6g 0.100R	.859 (21.82)	1.250 (31.75) 1.240 (31.50)	1.642 (41.7) 1.602 (40.7)	AS3582-028
17	E	1.957 (49.7) 1.917 (48.7)	1.321 (33.56) 1.314 (33.37)	.885 (22.48)	M34 1.0-6g 0.100R	.978 (24.84)	1.375 (34.92) 1.365 (34.67)	1.799 (45.7) 1.760 (44.7)	AS3582-029
19	F	2.035 (51.7) 1.996 (50.7)	1.441 (36.61) 1.434 (36.42)	1.009 (25.63)	M38 1.0-6g 0.100R	1.095 (27.81)	1.500 (38.10) 1.490 (37.85)	1.909 (48.5) 1.870 (47.5)	AS3582-030
21	G	2.157 (54.8) 2.118 (53.8)	1.566 (39.78) 1.559 (39.59)	1.134 (28.80)	M41 1.0-6g 0.100R	1.215 (30.86)	1.625 (41.28) 1.615 (41.03)	2.035 (51.7) 1.996 (50.7)	AS3582-031
23	H	2.283 (58.0) 2.244 (57.0)	1.691 (42.96) 1.684 (42.77)	1.259 (31.98)	M44 1.0-6g 0.100R	1.333 (33.86)	1.750 (44.45) 1.740 (44.20)	2.157 (54.8) 2.118 (53.8)	AS3582-032
25	J	2.409 (61.2) 2.370 (60.2)	1.816 (46.13) 1.809 (45.94)	1.384 (35.15)	M47 1.0-6g 0.100R	1.450 (36.83)	1.875 (47.63) 1.865 (47.38)	2.283 (58.0) 2.244 (57.0)	AS3582-033

NOTES

1. Material/Finish:
   - Shell Finish - See Table I
   - Insulator - High Grade Rigid Dielectric
   - Contacts - Copper Alloy
   - Potting - Epoxy.
2. Insert arrangement in accordance with MIL-STD-1560. Contact factory for additional insert arrangements.
3. Insert arrangement shown is for reference only.
4. Glenair 234-209-07 series connectors are designed to meet the applicable performance and interface requirements of MIL-DTL-38999, Series IV except as noted. Connector mates with any QPL manufacturer's MIL-DTL-38999 Series IV connectors with the same size insert, arrangement, and polarization.
5. Glenair's 234-209-07 receptacle connector is designed to withstand a minimum of 1500 mating durability cycles when mate to a "Super Nine" plug and appropriate contacts finish should be the same for both mating connectors to optimize performance.

SuperNine® Series IV Environmental

MIL-DTL-38999 Series IV Type
234-210 Panel mount and Jam nut receptacles with PC tails, threaded standoff

"BETTER-THAN-QPL" FEATURES AND BENEFITS

- Secure breech-lock mating connector meets D38999 shock and vibe
- Glenair Signature Tin Zinc finish class is RoHS compliant and cadmium compatible
- Precision-machined key/keyway polarization for reliable mismating protection
- Scoop-proof design prevents pin damage and short circuits
- Fully tooled for all MIL-STD-1560 insert arrangements
- Contact options include size #22D, #20, #16, and #12 (see High-Speed series for Size #8)
- 500 mating cycles exceeds MIL-DTL-38999 specification

HOW TO ORDER

Sample Part Number	234-210	-D0	NF	11	-35	P	N

Basic Part Number	234-210
Connector Style	(See Table II)
Material/Finish	(See Table I)
Shell Size	11, 13, 15, 17, 19, 21, 23, 25
Insert Arrangement	PER MIL-STD-1560
Insert Designator	P = Pin, Gold S = Socket, Gold H = Pin, Pd/Ni J = Socket, Pd/Ni
Alternate Polarization	A, B, C, D, K, L, M, R, N = Normal

TABLE I - MATERIAL/FINISH

Equiv Class	Sym	Material	Finish
W	NF	Aluminum Alloy	Cad/O.D. over Electroless Nickel
G*	MA**		Electroless Nickel, Matte
T*	MT		Nickel-PTFE
F	ME		Electroless Nickel
AA	MN		MegaNickel
V	TZ		Tin-Zinc
Z*	ZR		Zinc Ni, Black (Tri-Valent CR)
K*	Z1	Stainless Steel	Passivate
L*	ZL		Electrodeposited Nickel

* = Glenair Equivalent Only

** = Connectors for space applications must be ordered with "MA" finish and mod code "-186T" to conform to the thermal vacuum outgassing requirements of class G.

TABLE II - CONNECTOR STYLE

Sym	Description
D0	Receptacle, wall-mount with round holes, standard stand-off thread
M0	Receptacle, wall-mount with round holes, metric stand-off thread
CM	Receptacle, wall-mount with metric clinch nuts
CS	Receptacle, wall-mount with standard clinch nuts
HM	Receptacle, wall-mount with metric helicoil
HS	Receptacle, wall-mount with standard helicoils
07	Receptacle, jam nut mount standard stand-off thread
17	Receptacle, jam nut mount metric stand-off thread

TABLE VI - PC TAIL

Contact Size	PC Tail ØM
#23	.020 (0.51) .018 (0.46)
#22	.020 (0.51) .018 (0.46)
#20	.030 (0.76) .028 (0.71)
#16	.040 (1.02) .038 (0.97)
#12	.072 (1.83) .070 (1.78)

© 2025 Glenair, Inc • 1211 Air Way, Glendale, CA 91201 • 818-247-6000 • www.glenair.com • U.S. CAGE code 06324 • SuperNine Series IV
Dimensions in Inches (millimeters) are subject to change without notice.

MIL-DTL-38999 Series IV Type
234-210 Panel mount and Jam nut receptacles with PC tails, threaded standoff

TABLE IV - MOUNTING HOLES

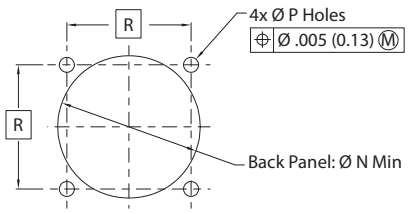

RECOMMENDED MOUNTING HOLES
FOR WALL MOUNT RECEPTACLES

Size Code	Shell Size	ØN Min	ØP Holes	R Bsc
B	11	0.796 (20.22)	.133 (3.38) .123 (3.12)	0.812 (20.62)
C	13	0.922 (23.42)		0.906 (23.01)
D	15	1.047 (26.59)		0.969 (24.61)
E	17	1.219 (30.96)		1.062 (26.97)
F	19	1.297 (32.94)		1.156 (29.36)
G	21	1.422 (36.12)		1.250 (31.75)
H	23	1.547 (39.29)	.159 (4.04) .149 (3.78)	1.375 (34.93)
J	25	1.672 (42.47)	.155 (3.94) .145 (3.68)	1.500 (38.10)

TABLE V - SHELL SIZE

Size Code	Shell Size	ØA	B Sq	B' Sq	C Bsc	D	D'	ØE	E' HS/CS	E' HM/CM	ØF Min	G Bsc
B	11	.793 (20.14) .778 (19.76)	1.051 (26.70) 1.008 (25.60)	1.187 (30.15) 1.147 (29.13)	0.812 (20.62)	.102 (2.59) .083 (2.11)	.180 (4.57) .150 (3.81)	.137 (3.48) .123 (3.12)	#4-40 UNC	M3 X0.5	0.468 (11.89)	0.719 (18.26)
C	13	.919 (23.34) .904 (22.96)	1.145 (29.08) 1.103 (28.02)	1.281 (32.54) 1.241 (31.52)	0.906 (23.01)						0.572 (14.53)	0.812 (20.62)
D	15	1.044 (26.52) 1.029 (26.14)	1.240 (31.50) 1.197 (30.40)	1.344 (34.14) 1.304 (33.12)	0.969 (24.61)						0.705 (17.91)	0.906 (23.01)
E	17	1.170 (29.72) 1.155 (29.34)	1.334 (33.88) 1.292 (32.82)	1.437 (36.50) 1.397 (35.48)	1.062 (26.97)						0.830 (21.08)	1.030 (26.16)
F	19	1.294 (32.87) 1.279 (32.49)	1.460 (37.08) 1.418 (36.02)	1.531 (38.89) 1.491 (37.87)	1.156 (29.36)						0.934 (23.72)	1.150 (29.21)
G	21	1.419 (36.04) 1.404 (35.66)	1.582 (40.18) 1.540 (39.12)	1.625 (41.28) 1.585 (40.26)	1.250 (31.75)	.133 (3.38) .115 (2.92)					1.055 (26.80)	1.221 (31.01)
H	23	1.544 (39.22) 1.529 (38.84)	1.708 (43.38) 1.666 (42.32)	1.750 (44.45) 1.710 (43.43)	1.375 (34.93)		.190 (4.83) .170 (4.32)	.157 (3.99) .142 (3.61)	#6-32 UNC	M4 X0.7	1.160 (29.46)	1.360 (34.54)
J	25	1.669 (42.39) 1.654 (42.01)	1.834 (46.58) 1.792 (45.52)	1.875 (47.63) 1.835 (46.61)	1.500 (38.10)						1.307 (33.20)	1.475 (37.47)

© 2025 Glenair, Inc • 1211 Air Way, Glendale, CA 91201 • 818-247-6000 • www.glenair.com • U.S. CAGE code 06324 • SuperNine Series IV
Dimensions in Inches (millimeters) are subject to change without notice.

MIL-DTL-38999 Series IV Type
234-210 Panel mount and Jam nut receptacles with PC tails, threaded standoff

TABLE VII - JAM NUT MOUNT CONFIGURATION

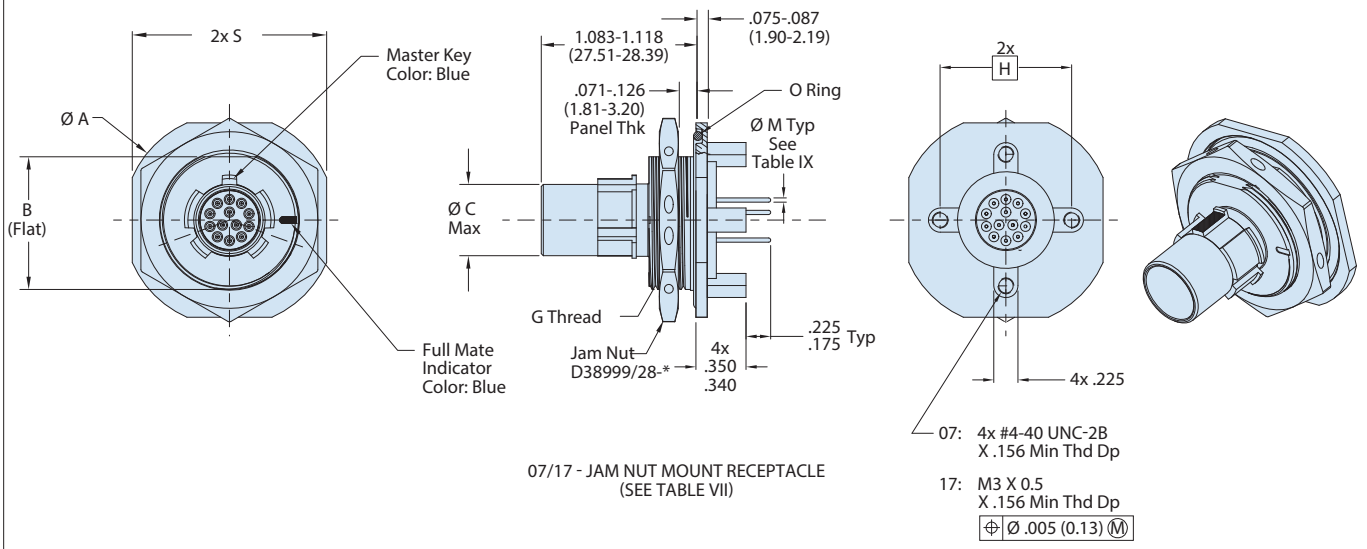

Shell Size	Shell Size Code	ØA	B (Flat)	ØC Max	G Thread	H Basic	S	O-Ring P/N
11	B	1.520 (38.6) 1.480 (37.6)	.942 (23.93) .935 (23.74)	.509 (12.93)	M25 X 1.0-6g 0.100R	0.719	1.394 (35.4) 1.354 (34.4)	AS3582-024
13	C	1.642 (41.7) 1.602 (40.7)	1.066 (27.08) 1.059 (26.89)	.634 (16.10)	M28 X 1.0-6g 0.100R	0.812	1.520 (38.6) 1.480 (37.6)	AS3582-026
15	D	1.768 (44.9) 1.728 (43.9)	1.191 (30.26) 1.184 (30.07)	.759 (19.28)	M31 X 1.0-6g 0.100R	0.906	1.642 (41.7) 1.602 (40.7)	AS3582-028
17	E	1.957 (49.7) 1.917 (48.7)	1.321 (33.56) 1.314 (33.37)	.885 (22.48)	M34 X 1.0-6g 0.100R	1.030	1.799 (45.7) 1.760 (44.7)	AS3582-029
19	F	2.035 (51.7) 1.996 (50.7)	1.441 (36.61) 1.434 (36.42)	1.009 (25.63)	M38 X 1.0-6g 0.100R	1.150	1.909 (48.5) 1.870 (47.5)	AS3582-030
21	G	2.157 (54.8) 2.118 (53.8)	1.566 (39.78) 1.559 (39.59)	1.134 (28.80)	M41 X 1.0-6g 0.100R	1.221	2.035 (51.7) 1.996 (50.7)	AS3582-031
23	H	2.283 (58.0) 2.244 (57.0)	1.691 (42.96) 1.684 (42.77)	1.259 (31.98)	M44 X 1.0-6g 0.100R	1.360	2.157 (54.8) 2.118 (53.8)	AS3582-032
25	J	2.409 (61.2) 2.370 (60.2)	1.816 (46.13) 1.809 (45.94)	1.384 (35.15)	M47 X 1.0-6g 0.100R	1.475	2.283 (58.0) 2.244 (57.0)	AS3582-033

TABLE VIII - PANEL CUT-OUT

Shell Size	Shell Size Code	ØKK	BB
11	B	1.020 (25.91) 1.010 (25.65)	0.955 (24.26) 0.945 (24.00)
13	C	1.145 (29.08) 1.135 (28.83)	1.085 (27.56) 1.075 (27.31)
15	D	1.270 (32.26) 1.260 (32.00)	1.210 (30.73) 1.200 (30.48)
17	E	1.395 (35.43) 1.385 (35.18)	1.335 (33.91) 1.325 (33.66)
19	F	1.520 (38.61) 1.510 (38.35)	1.460 (37.08) 1.450 (36.83)
21	G	1.645 (41.78) 1.635 (41.53)	1.585 (40.26) 1.575 (40.01)
23	H	1.770 (44.96) 1.760 (44.70)	1.710 (43.43) 1.700 (43.18)
25	J	1.895 (48.13) 1.885 (47.88)	1.835 (46.61) 1.825 (46.36)

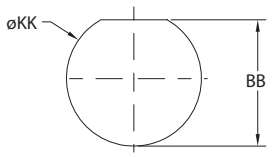

Jam-Nut Receptacle
Recommended panel cut-out

TABLE IX - PC TAIL

Contact Size	PC Tail ØM
#23	.020 (0.51) .018 (0.46)
#22	.020 (0.51) .018 (0.46)
#20	.030 (0.76) .028 (0.71)
#16	.040 (1.02) .038 (0.97)
#12	.072 (1.83) .070 (1.78)

© 2025 Glenair, Inc • 1211 Air Way, Glendale, CA 91201 • 818-247-6000 • www.glenair.com • U.S. CAGE code 06324 • SuperNine Series IV
Dimensions in Inches (millimeters) are subject to change without notice.

MIL-DTL-38999 Series IV Type
234-210 Panel mount and Jam nut receptacles with PC tails, threaded standoff

WALL MOUNT RECEPTACLE 234-210 -D0/M0

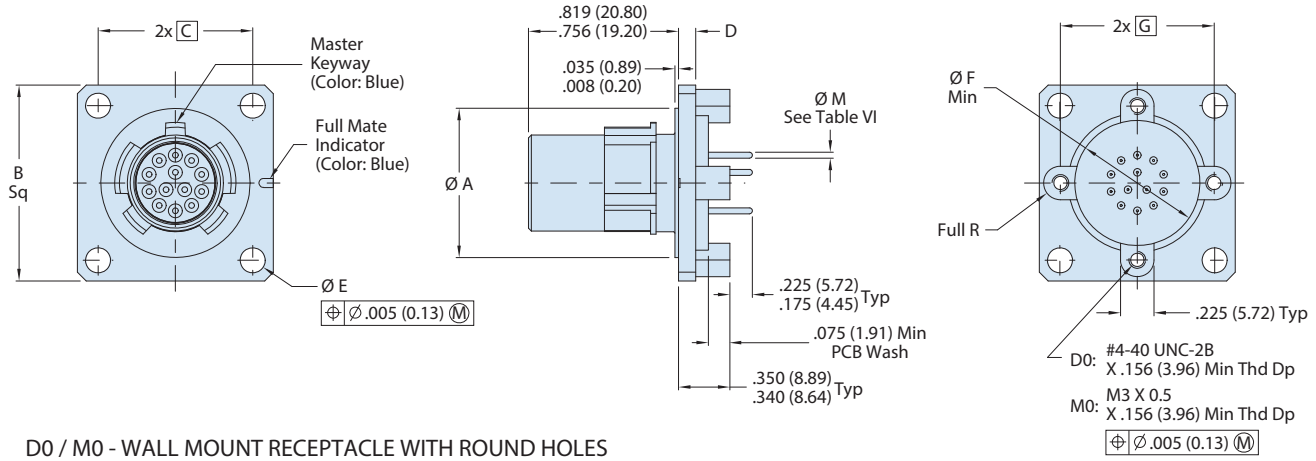

D0 / M0 - WALL MOUNT RECEPTACLE WITH ROUND HOLES

WALL MOUNT RECEPTACLE 234-210 -HS/HM

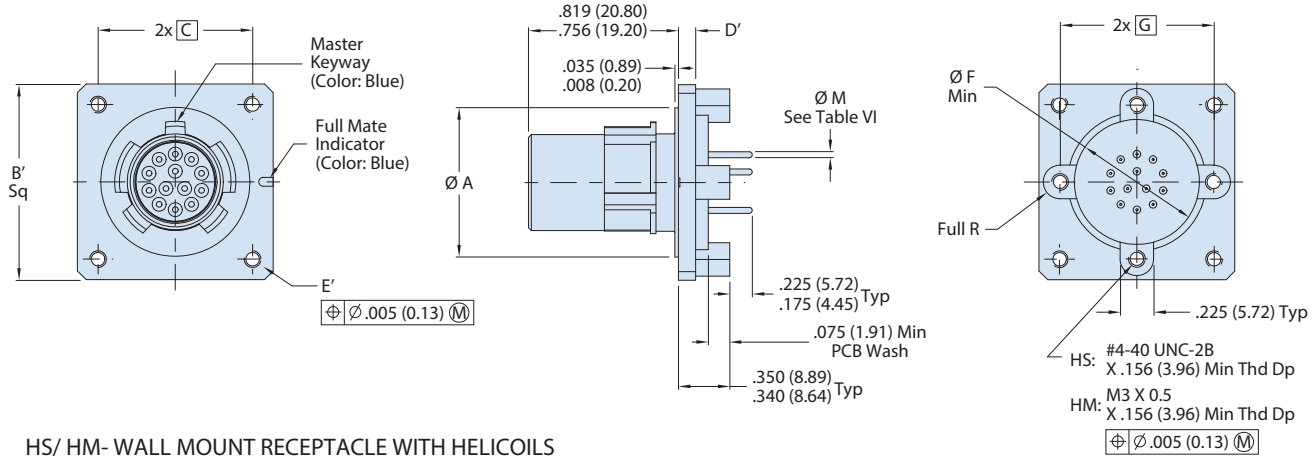

HS/ HM- WALL MOUNT RECEPTACLE WITH HELICOILS

NOTES

1. Material/Finish:
   - Shell, Jam Nut - See Table I
   - Contacts - Copper Alloy / See Table III
   - Insulators - High Grade Rigid Dielectric.
   - Seals - Fluorosilicone Blend.
   - Potting - Epoxy.
2. Glenair's 234-210 receptacle connector is designed to meet the applicable performance and interface requirements of MIL-DTL-38999 Series IV except as shown and/or noted. Receptacle mates with any QPL manufacturer's MIL-DTL-38999, Series IV plug having complimentary features (shell size, insert arrangement, polarization, and contact gender).
3. Glenair's 234-210 receptacle connector is designed with fixed PC tail contacts. Connector potting process meets or exceeds ingress protection rating IP67 and is environmentally sealed with a leak rate of < 1 X 10^ -4 ccHe/sec in an unmated condition.
4. Insert arrangement is in accordance with MIL-STD-1560. Arrangement shown for reference only.

MIL-DTL-38999 Series IV Type
234-210 Panel mount and Jam nut receptacles with PC tails, threaded standoff

WALL MOUNT RECEPTACLE 234-210 -CS/CM

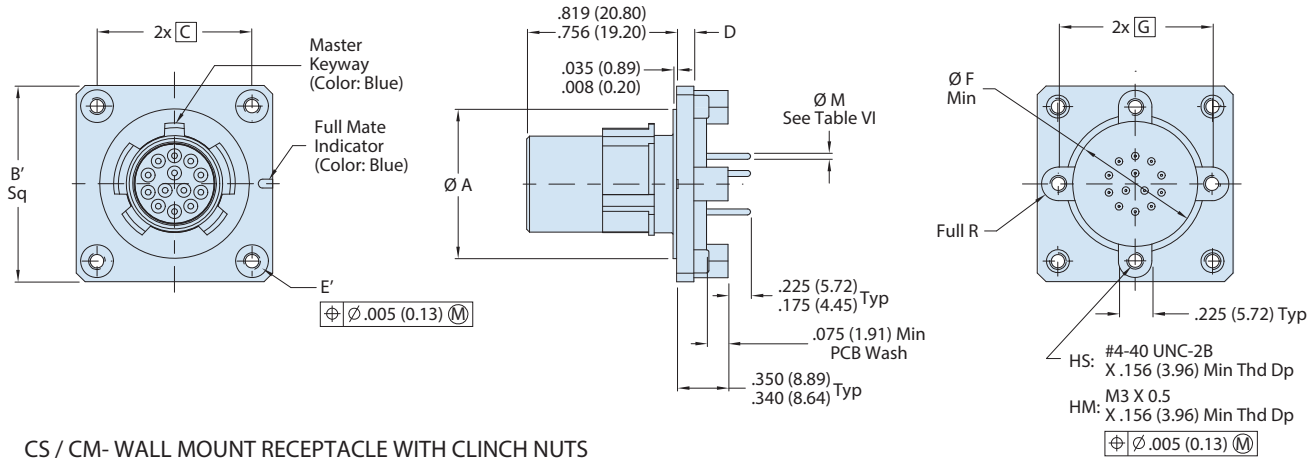

CS / CM- WALL MOUNT RECEPTACLE WITH CLINCH NUTS

© 2025 Glenair, Inc • 1211 Air Way, Glendale, CA 91201 • 818-247-6000 • www.glenair.com • U.S. CAGE code 06324 • SuperNine Series IV
Dimensions in Inches (millimeters) are subject to change without notice.

MIL-DTL-38999 Series IV Type
234-211 Panel mount receptacles with PC tails, dual-flange

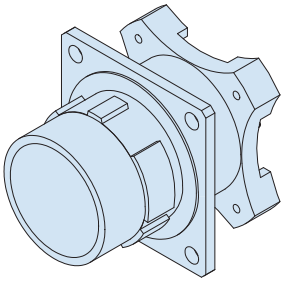

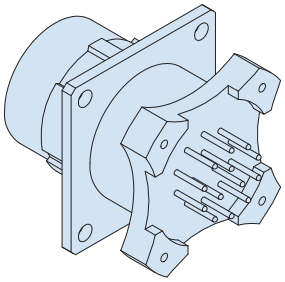

"BETTER-THAN-QPL" FEATURES AND BENEFITS

- Secure breech-lock mating connector meets D38999 shock and vibe
- Glenair Signature Tin Zinc finish class is RoHS compliant and cadmium compatible
- Precision-machined key/keyway polarization for reliable mismating protection
- Scoop-proof design prevents pin damage and short circuits
- Fully tooled for all MIL-STD-1560 insert arrangements
- Contact options include size #22D, #20, #16, and #12 (see High-Speed series for Size #8)
- 500 mating cycles exceeds MIL-DTL-38999 specification

HOW TO ORDER

Sample Part Number	234-211	-D0	NF	11	-35	P	N

Basic Part Number	234-211
Connector Style	(See Table II)
Material/Finish	(See Table I)
Shell Size	11, 13, 15, 17, 19, 21, 23, 25
Insert Arrangement	PER MIL-STD-1560
Insert Designator	P = Pin, Gold S = Socket, Gold H = Pin, Pd/Ni J = Socket, Pd/Ni
Alternate Polarization	A, B, C, D, K, L, M, R, N = Normal

TABLE I - MATERIAL/FINISH

Equiv Class	Sym	Material	Finish
W	NF	Aluminum Alloy	Cad/O.D. over Electroless Nickel
G*	MA**		Electroless Nickel, Matte
T*	MT		Nickel-PTFE
F	ME		Electroless Nickel
AA	MN		MegaNickel
V	TZ		Tin-Zinc
Z*	ZR		Zinc Ni, Black (Tri-Valent CR)
K*	Z1	Stainless Steel	Passivate
L*	ZL		Electrodeposited Nickel

* = Glenair Equivalent Only

** = Connectors for space applications must be ordered with "MA" finish and mod code "-186T" to conform to the thermal vacuum outgassing requirements of class G.

TABLE II - CONNECTOR STYLE

Sym	Description
D0	Receptacle, wall-mount with round holes, standard stand-off thread
M0	Receptacle, wall-mount with round holes, metric stand-off thread
CM	Receptacle, wall-mount with metric clinch nuts
CS	Receptacle, wall-mount with standard clinch nuts
HM	Receptacle, wall-mount with metric helicoil
HS	Receptacle, wall-mount with standard helicoils

MIL-DTL-38999 Series IV Type
234-211 Panel mount receptacles with PC tails, dual-flange

TABLE IV - MOUNTING HOLES

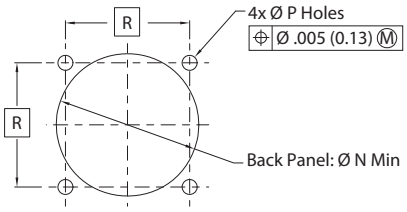

RECOMMENDED MOUNTING HOLES FOR WALL MOUNT RECEPTACLES

Size Code	Shell Size	ØN Min	ØP Holes	R Bsc
B	11	0.796 (20.22)	.133 (3.38) .123 (3.12)	0.812 (20.62)
C	13	0.922 (23.42)		0.906 (23.01)
D	15	1.047 (26.59)		0.969 (24.61)
E	17	1.219 (30.96)		1.062 (26.97)
F	19	1.297 (32.94)		1.156 (29.36)
G	21	1.422 (36.12)		1.250 (31.75)
H	23	1.547 (39.29)	.159 (4.04) .149 (3.78)	1.375 (34.93)
J	25	1.672 (42.47)	.155 (3.94) .145 (3.68)	1.500 (38.10)

TABLE VI - PC TAIL

Contact Size	PC Tail ØM
#23	.020 (0.51) .018 (0.46)
#22	.020 (0.51) .018 (0.46)
#20	.030 (0.76) .028 (0.71)
#16	.040 (1.02) .038 (0.97)
#12	.072 (1.83) .070 (1.78)

TABLE V - SHELL SIZE

Size Code	Shell Size	ØA	B Sq	B′ Sq	C Bsc	D	D′	ØE	E′ HS/CS	E′ HM/CM	ØF ±.005	ØG Bsc	H ±.010
B	11	.793 (20.14) .778 (19.76)	1.051 (26.70) 1.008 (25.60)	1.187 (30.15) 1.147 (29.13)	0.812 (20.62)	.102 (2.59) .083 (2.11)	.180 (4.57) .150 (3.81)	.138 (3.51) .122 (3.10)	#4-40 UNC	M3 X0.5	0.595 (15.11)	0.850 (21.59)	0.250 (6.35)
C	13	.919 (23.34) .904 (22.96)	1.145 (29.08) 1.103 (28.02)	1.281 (32.54) 1.241 (31.52)	0.906 (23.01)						0.720 (18.29)	0.994 (25.25)	0.250 (6.35)
D	15	1.044 (26.52) 1.029 (26.14)	1.240 (31.50) 1.197 (30.40)	1.344 (34.14) 1.304 (33.12)	0.969 (24.61)						0.843 (21.41)	1.119 (28.42)	0.325 (8.26)
E	17	1.170 (29.72) 1.155 (29.34)	1.334 (33.88) 1.292 (32.82)	1.437 (36.50) 1.397 (35.48)	1.062 (26.97)						1.000 (25.40)	1.237 (31.42)	0.375 (9.53)
F	19	1.294 (32.87) 1.279 (32.49)	1.460 (37.08) 1.418 (36.02)	1.531 (38.89) 1.491 (37.87)	1.156 (29.36)						1.125 (28.58)	1.379 (35.03)	0.500 (12.70)
G	21	1.419 (36.04) 1.404 (35.66)	1.582 (40.18) 1.540 (39.12)	1.625 (41.28) 1.585 (40.26)	1.250 (31.75)	.133 (3.38) .115 (2.92)					1.240 (31.50)	1.489 (37.82)	0.562 (14.27)
H	23	1.544 (39.22) 1.529 (38.84)	1.708 (43.38) 1.666 (42.32)	1.750 (44.45) 1.710 (43.43)	1.375 (34.93)		.190 (4.83) .170 (4.32)	.157 (3.99) .142 (3.61)	#6-32 UNC	M4 X0.7	1.328 (33.73)	1.619 (41.12)	0.688 (17.48)
J	25	1.669 (42.39) 1.654 (42.01)	1.834 (46.58) 1.792 (45.52)	1.875 (47.63) 1.835 (46.61)	1.500 (38.10)						1.453 (36.91)	1.744 (44.30)	0.750 (19.05)

© 2025 Glenair, Inc • 1211 Air Way, Glendale, CA 91201 • 818-247-6000 • www.glenair.com • U.S. CAGE code 06324 • SuperNine Series IV
Dimensions in Inches (millimeters) are subject to change without notice.

MIL-DTL-38999 Series IV Type
234-211 Panel mount receptacles with PC tails, dual-flange

WALL MOUNT RECEPTACLE 234-211 - D0/M0

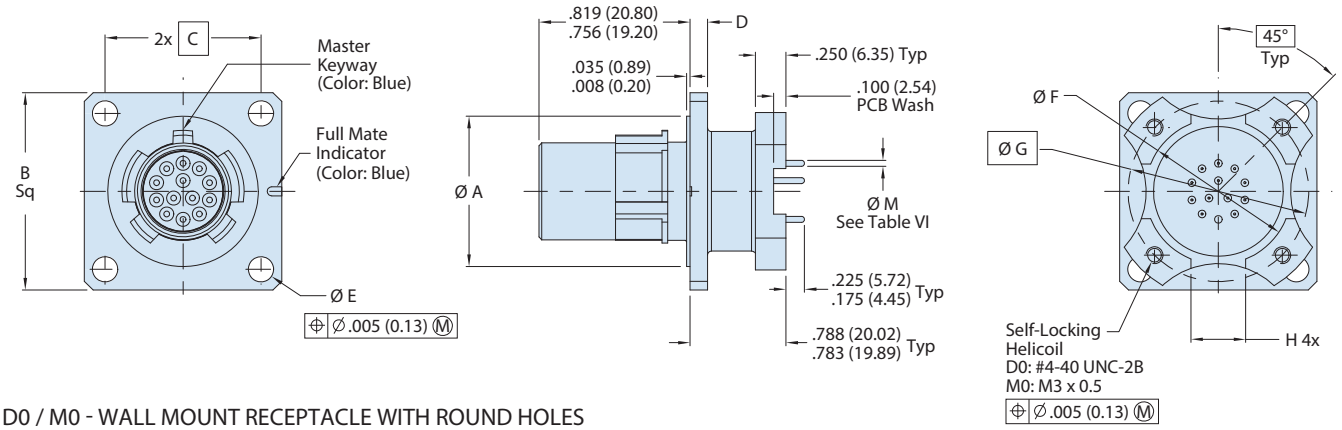

D0 / M0 - WALL MOUNT RECEPTACLE WITH ROUND HOLES

WALL MOUNT RECEPTACLE 234-211 - HS/HM

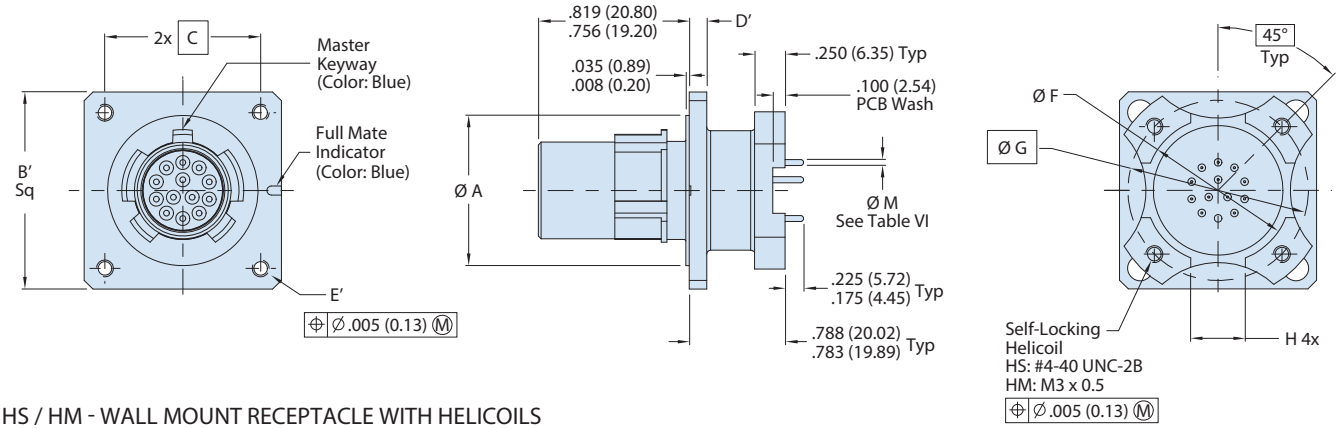

HS / HM - WALL MOUNT RECEPTACLE WITH HELICOILS

NOTES

1. Material/Finish:
   - Shell, Jam Nut - See Table I
   - Contacts - Copper Alloy / See Table III
   - Insulators - High Grade Rigid Dielectric.
   - Seals - Fluorosilicone Blend.
   - Potting - Epoxy.
2. Glenair's 234-211 receptacle connector is designed to meet the applicable performance and interface requirements of MIL-DTL-38999 Series IV except as shown and/or noted. Receptacle mates with any QPL manufacturer's MIL-DTL-38999, Series IV plug having complimentary features (shell size, insert arrangement, polarization, and contact gender).
3. Glenair's 234-211 receptacle connector is designed with fixed PC tail contacts. Connector potting process meets or exceeds ingress protection rating IP67 and is environmentally sealed with a leak rate of < 1 X 10^ -4 ccHe/sec in an unmated condition.
4. Insert arrangement is in accordance with MIL-STD-1560. Arrangement shown for reference only.

MIL-DTL-38999 Series IV Type
234-211 Panel mount receptacles with PC tails, dual-flange

WALL MOUNT RECEPTACLE 234-211 - HS/HM

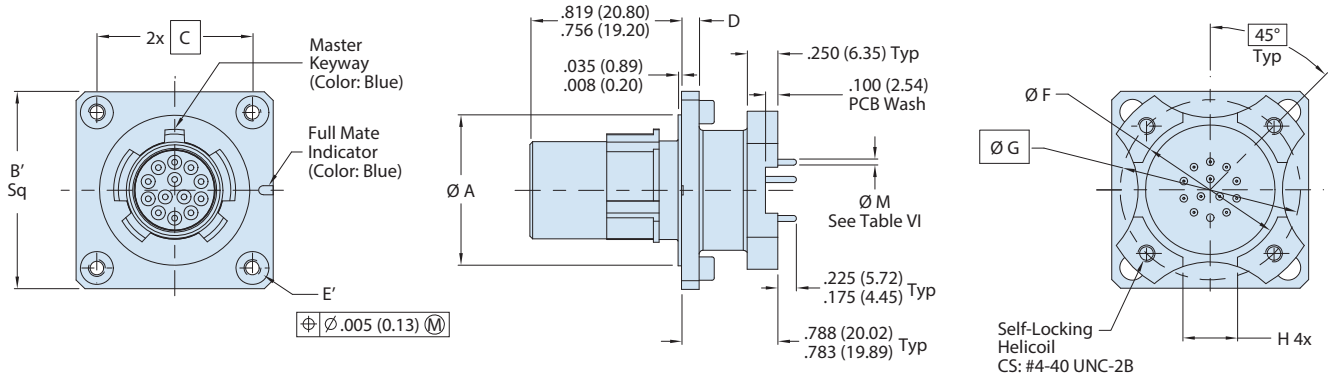

CS / CM - WALL MOUNT RECEPTACLE WITH CLINCH NUTS

© 2025 Glenair, Inc • 1211 Air Way, Glendale, CA 91201 • 818-247-6000 • www.glenair.com • U.S. CAGE code 06324 • SuperNine Series IV
Dimensions in Inches (millimeters) are subject to change without notice.

MIL-DTL-38999 Series IV Type
234-211-07 Jam nut receptacles with PC tails, dual-flange

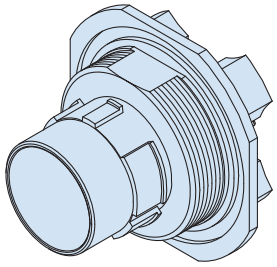

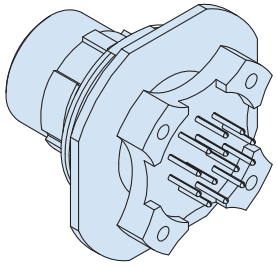

HOW TO ORDER

Sample Part Number	234-211	-07	NF	11	-35	P	N

Basic Part Number	**234-211**
Connector Style	**07** = Jam-Nut, Standard Thread Flange **17** = Jam-Nut, Metric Thread Flange
Material/Finish	(See Table I)
Shell Size	**11**, **13**, **15**, **17**, **19**, **21**, **23**, **25**
Insert Arrangement	PER MIL-STD-1560
Insert Designator	**P** = Pin, Gold **S** = Socket, Gold **H** = Pin, Pd/Ni **J** = Socket, Pd/Ni
Alternate Polarization	**A, B, C, D, K, L, M, R, N** = Normal

TABLE I - MATERIAL/FINISH

Equiv Class	Sym	Material	Finish
W	**NF**	Aluminum Alloy	Cad/O.D. over Electroless Nickel
G*	**MA****		Electroless Nickel, Matte
T*	**MT**		Nickel-PTFE
F	**ME**		Electroless Nickel
AA	**MN**		MegaNickel
V	**TZ**		Tin-Zinc
Z*	**ZR**		Zinc Ni, Black (Tri-Valent CR)
K*	**Z1**	Stainless Steel	Passivate
L*	**ZL**		Electrodeposited Nickel

* = Glenair Equivalent Only

** = Connectors for space applications must be ordered with "MA" finish and mod code "-186T" to conform to the thermal vacuum outgassing requirements of class G.

TABLE IV - PC TAIL

Contact Size	PC Tail ØM
#23	.020 (0.51) .018 (0.46)
#22	.020 (0.51) .018 (0.46)
#20	.030 (0.76) .028 (0.71)
#16	.040 (1.02) .038 (0.97)
#12	.072 (1.83) .070 (1.78)

"BETTER-THAN-QPL" FEATURES AND BENEFITS

- Secure breech-lock mating connector meets D38999 shock and vibe
- Improved plug ground fingers deliver outstanding EMI performance—equal to D38999 Series III
- Glenair Signature Tin Zinc finish class is RoHS compliant and cadmium compatible
- Precision-machined key/keyway polarization for reliable mismating protection
- Scoop-proof design prevents pin damage and short circuits
- Fully tooled for all MIL-STD-1560 insert arrangements
- Contact options include size #22D, #20, #16, and #12 (see High-Speed series for Size #8)
- 500 mating cycles exceeds MIL-DTL-38999 specification

MIL-DTL-38999 Series IV Type
234-211-07 Jam nut receptacles with PC tails, dual-flange

TABLE III - SHELL SIZE

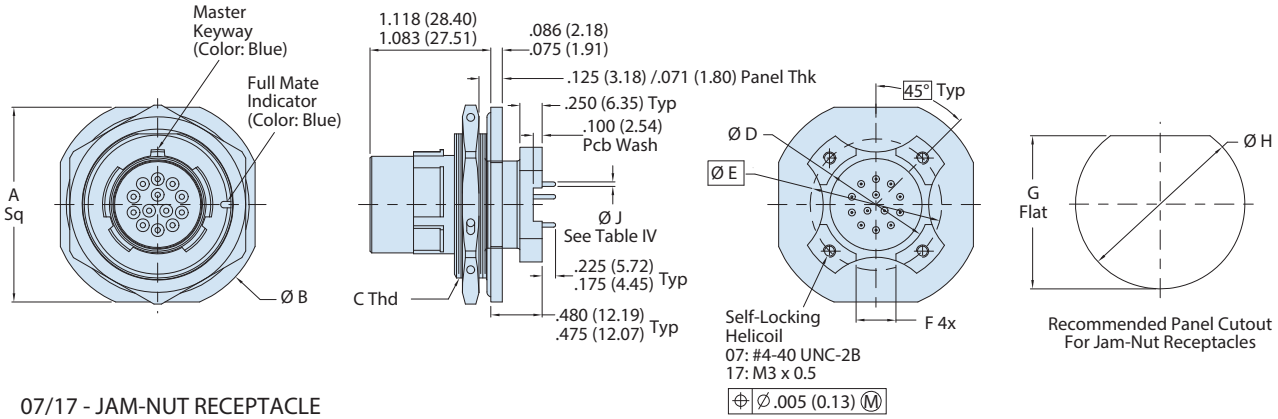

07/17 - JAM-NUT RECEPTACLE

Size Code	Shell Size	A Sq	ØB	C Thd	ØD ±.005	ØE Bsc	F ±.010	G Flat	ØH
B	11	1.393 (35.38) 1.355 (34.42)	1.519 (38.58) 1.481 (37.62)	M25 X 1.0-6g	0.595 (15.11)	0.850 (21.59)	0.250 (6.35)	0.955 (24.26) 0.946 (24.03)	1.019 (25.88) 1.010 (25.65)
C	13	1.519 (38.58) 1.481 (37.62)	1.641 (41.68) 1.603 (40.72)	M28 X 1.0-6g	0.720 (18.29)	0.994 (25.25)	0.250 (6.35)	1.085 (27.56) 1.076 (27.33)	1.144 (29.06) 1.136 (28.85)
D	15	1.641 (41.68) 1.603 (40.72)	1.767 (44.88) 1.729 (43.92)	M31 X 1.0-6g	0.843 (21.41)	1.119 (28.42)	0.325 (8.26)	1.209 (30.71) 1.200 (30.48)	1.270 (32.26) 1.261 (32.03)
E	17	1.799 (45.69) 1.760 (44.70)	1.956 (49.68) 1.918 (48.72)	M34 X 1.0-6g	1.000 (25.40)	1.237 (31.42)	0.375 (9.53)	1.335 (33.91) 1.326 (33.68)	1.394 (35.41) 1.386 (35.20)
F	19	1.909 (48.49) 1.871 (47.52)	2.035 (51.69) 1.997 (50.72)	M38 X 1.0-6g	1.125 (28.58)	1.379 (35.03)	0.500 (12.70)	1.459 (37.06) 1.450 (36.83)	1.519 (38.58) 1.510 (38.35)
G	21	2.035 (51.69) 1.997 (50.72)	2.157 (54.79) 2.119 (53.82)	M41 X 1.0-6g	1.240 (31.50)	1.489 (37.82)	0.562 (14.27)	1.585 (40.26) 1.576 (40.03)	1.644 (41.76) 1.636 (41.55)
H	23	2.157 (54.79) 2.119 (53.82)	2.283 (57.99) 2.245 (57.02)	M44 X 1.0-6g	1.328 (33.73)	1.619 (41.12)	0.688 (17.48)	1.709 (43.41) 1.700 (43.18)	1.769 (44.93) 1.760 (44.70)
J	25	2.283 (57.99) 2.245 (57.02)	2.409 (61.19) 2.371 (60.22)	M47 X 1.0-6g	1.453 (36.91)	1.744 (44.30)	0.750 (19.05)	1.835 (46.61) 1.826 (46.38)	1.894 (48.11) 1.886 (47.90)

NOTES

1. Material/Finish:
   - Shell, Jam Nut - See Table I
   - Contacts - Copper Alloy / See Table III
   - Insulators - High Grade Rigid Dielectric.
   - Seals - Fluorosilicone Blend.
   - O-ring - Silver Plated Aluminum in Fluorosilicone (Cho-Seal 1298 or Equivalent)
   - Potting - Epoxy.
2. Glenair's 234-211 receptacle connector is designed to meet the applicable performance and interface requirements of MIL-DTL-38999 Series IV except as shown and/or noted. Receptacle mates with any QPL manufacturer's MIL-DTL-38999, Series IV plug having complimentary features (shell size, insert arrangement, polarization, and contact gender).
3. Glenair's 234-211 receptacle connector is designed with fixed PC tail contacts. Connector potting process meets or exceeds ingress protection rating IP67 and is environmentally sealed with a leak rate of < 1 X 10^ -4 ccHe/sec in an unmated condition.
4. Insert arrangement is in accordance with MIL-STD-1560. Arrangement shown for reference only.

© 2025 Glenair, Inc • 1211 Air Way, Glendale, CA 91201 • 818-247-6000 • www.glenair.com • U.S. CAGE code 06324 • SuperNine Series IV
Dimensions in Inches (millimeters) are subject to change without notice.

MIL-DTL-38999 Series IV Type
234-212 Panel mount feed-thru receptacles with PC tails

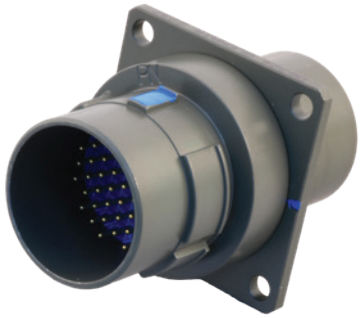

"BETTER-THAN-QPL" FEATURES AND BENEFITS

- Secure breech-lock mating connector meets D38999 shock and vibe
- Glenair Signature Tin Zinc finish class is RoHS compliant and cadmium compatible
- Precision-machined key/keyway polarization for reliable mismating protection
- Scoop-proof design prevents pin damage and short circuits
- Fully tooled for all MIL-STD-1560 insert arrangements
- Contact options include size #22D, #20, #16, and #12 (see High-Speed series for Size #8)
- 500 mating cycles exceeds MIL-DTL-38999 specification

HOW TO ORDER

Sample Part Number	234-212	-D0	NF	11	-35	P	N	-01

Basic Part Number	**234-212**
Connector Style	**D0** = Receptacle, wall-mount through holes **HM** = Receptacle, wall-mount w/metric helicoil **HS** = Receptacle, wall-mount w/standard helicoil **CM** = Receptacle, wall-mount w/metric clinch nut **CS** = Receptacle, wall-mount w/standard clinch nut
Material/Finish	(See Table II)
Shell Size	**11**, **13**, **15**, **17**, **19**, **21**, **23**, **25**
Insert Arrangement	PER MIL-STD-1560
Insert Designator	**P** = Pin Contact, Gold, Socket on opposite side, 1500 Cycles **S** = Socket Contact Gold, Socket on opposite side, 1500 Cycles
Alternate Polarization	**A, B, C, D, E, N** = Normal, **U** = Universal (Glenair Equivalent Only)
Panel Accomodation	(See Table V)

TABLE I - MATERIAL/FINISH

Equiv Class	Sym	Material	Finish
W	**NF**	Aluminum Alloy	Cad/O.D. over Electroless Nickel
G*	**MA****		Electroless Nickel, Matte
T*	**MT**		Nickel-PTFE
F	**ME**		Electroless Nickel
AA	**MN**		MegaNickel
V	**TZ**		Tin-Zinc
Z*	**ZR**		Zinc Ni, Black (Tri-Valent CR)
K*	**Z1**	Stainless Steel	Passivate
L*	**ZL**		Electrodeposited Nickel

* = Glenair Equivalent Only

** = Connectors for space applications must be ordered with "MA" finish and mod code "-186T" to conform to the thermal vacuum outgassing requirements of class G.

TABLE VII - POLARIZING POSITIONS

	N	A	B	C	D	K	L	M	R	U
X	110°	100°	90°	80°	70°	120°	120°	120°	120°	N/A
Y	250°	260°	270°	280°	290°	255°	265°	275°	285°	N/A

MIL-DTL-38999 Series IV Type
234-212 Panel mount feed-thru receptacles with PC tails

WALL MOUNT RECEPTACLE 234-212 - D0

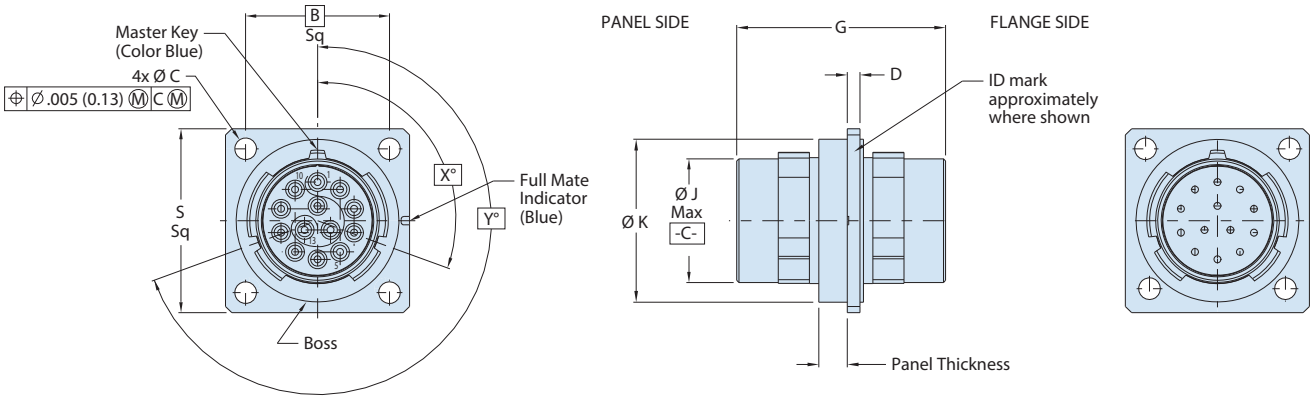

D0 - WALL MOUNT RECEPTACLE
THRU HOLE (SEE TABLE V)

TABLE VI - PANEL CUTOUT

Shell Size	Shell Size Code	ØKK Min	BB Bsc	ØDD
11	B	0.796 (20.22)	0.812 (20.62)	.133 (3.38) /.123 (3.12)
13	C	0.922 (23.42)	0.906 (23.01)	
15	D	1.047 (26.59)	0.969 (24.61)	
17	E	1.219 (30.96)	1.062 (26.97)	
19	F	1.297 (32.94)	1.156 (29.36)	
21	G	1.422 (36.12)	1.250 (31.75)	
23	H	1.547 (39.29)	1.375 (34.93)	.159 (4.04) / .149 (3.78)
25	J	1.672 (42.47)	1.500 (38.10)	.155 (3.94) / .145 (3.68)

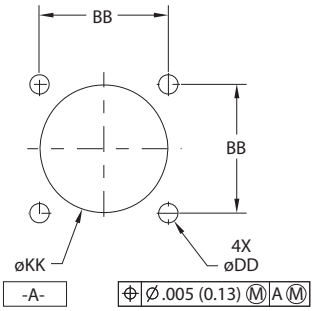

Wall Mount Receptacle
Recommended Panel Cutout

NOTES

1. Material/Finish:
   - Shell - See Table Ii
   - Contacts - Copper Alloy / Gold Plated
   - Insulators - High-Grade Rigid Dielectric.
   - Seals - Fluorosilicone Blend.
2. Glenair's 234-212 feedthru connector is designed to meet or exceed the mechanical, dimensional, electrical and environmental requirements of MIL-DTL-38999, and MIL-STD-1560 except as shown and/or noted. Glenair feedthru mates with any QPL manufacturer's MIL-DTL-38999, Series IV plug connector, D38999/46, having the same shell size, insert arrangement, and polarization.
3. Insert arrangement is in accordance with MIL-STD-1560. Contact manufacturer for additional arrangement options.
4. Insert arrangement is shown for reference only. Pin interface show
5. Pin or socket on panel side will result opposite on the other side of connectors.
6. Power to a given contact on one end will result in power to a contact directly opposite, regardless of identification letter.
7. Electrical safety limits must be established by user. Peak voltage, switching surge, transient, etc. Should be used to determine the safety application.
8. Alternate polarization 'U' (Universal) is a non-standard/non-mil-spec option which allows for mating to any QPL manufacturer's MIL-DTL-38999, Series IV connector having the same shell size, insert arrangement, and mating contact size. Universal connectors are intended for use in testing facilities only and should be highly evaluated before consideration in another environment
9. Front panel mount only.

© 2025 Glenair, Inc • 1211 Air Way, Glendale, CA 91201 • 818-247-6000 • www.glenair.com • U.S. CAGE code 06324 • SuperNine Series IV
Dimensions in Inches (millimeters) are subject to change without notice.

MIL-DTL-38999 Series IV Type
234-212 Panel mount feed-thru receptacles with PC tails

WALL MOUNT RECEPTACLE 234-212 - CM

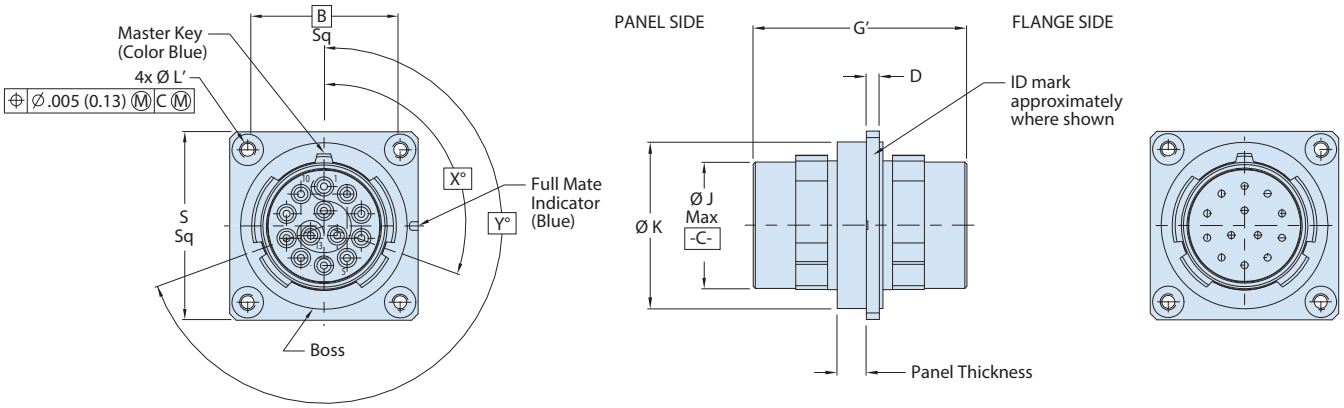

CM - WALL MOUNT RECEPTACLE
METRIC CLINCH NUTS (SEE TABLE V)

WALL MOUNT RECEPTACLE 234-212 - CS

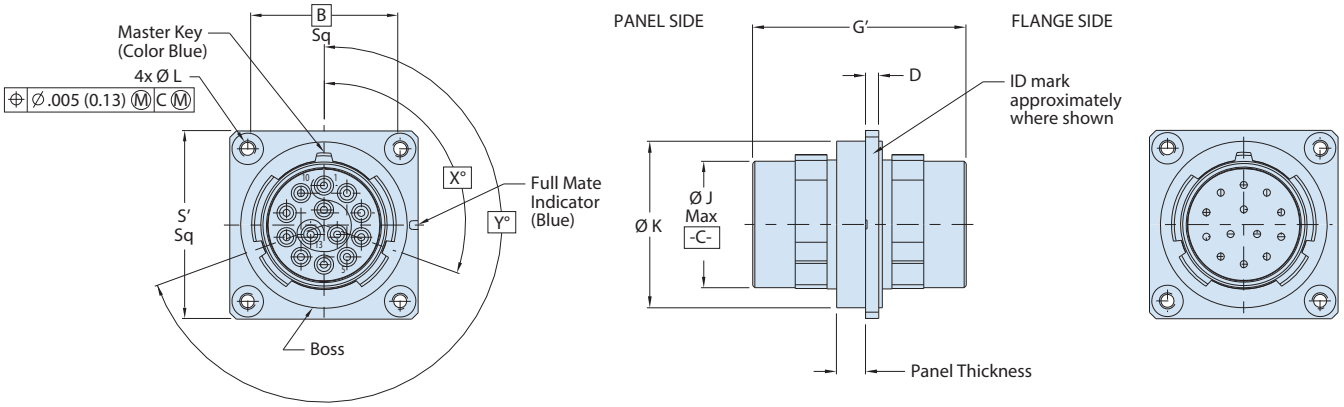

CS - WALL MOUNT RECEPTACLE
STANDARD CLINCH NUTS (SEE TABLE V)

TABLE V - PANEL ACCOMMODATION/OVERALL LENGTH

Sym	Panel Thickness	G ± .020	G' ± .020
01	.175 (4.45) .062 (1.57)	1.840 (46.74)	1.902 (48.31)
02	.300 (7.62) .062 (1.57)	1.966 (49.94)	2.028 (51.51)
03	.500 (12.70) .062 (1.57)	2.166 (55.02)	2.228 (56.59)

MIL-DTL-38999 Series IV Type
234-212 Panel mount feed-thru receptacles with PC tails

WALL MOUNT RECEPTACLE 234-212 - HM

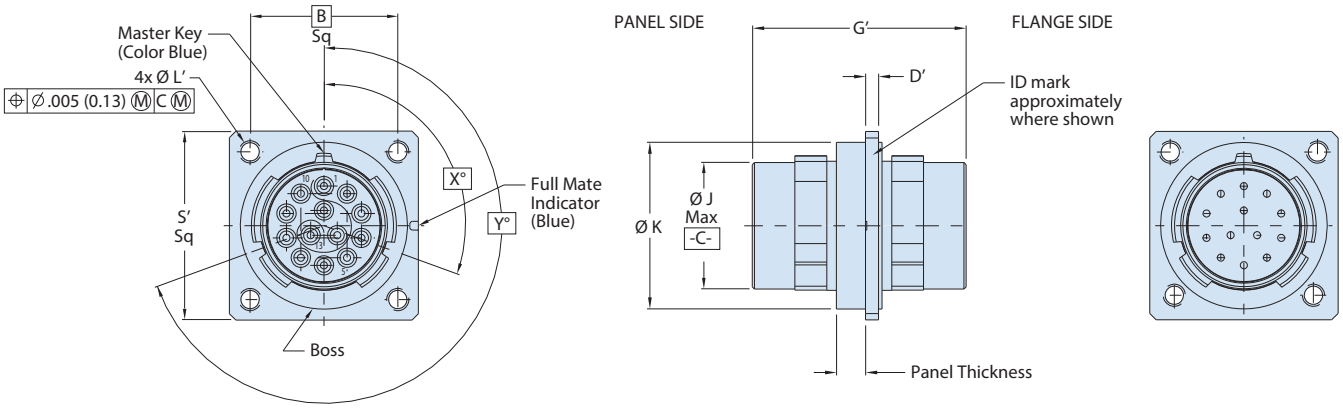

HM - WALL MOUNT RECEPTACLE
METRIC HELICOIL (SEE TABLE V)

WALL MOUNT RECEPTACLE 234-212 - HS

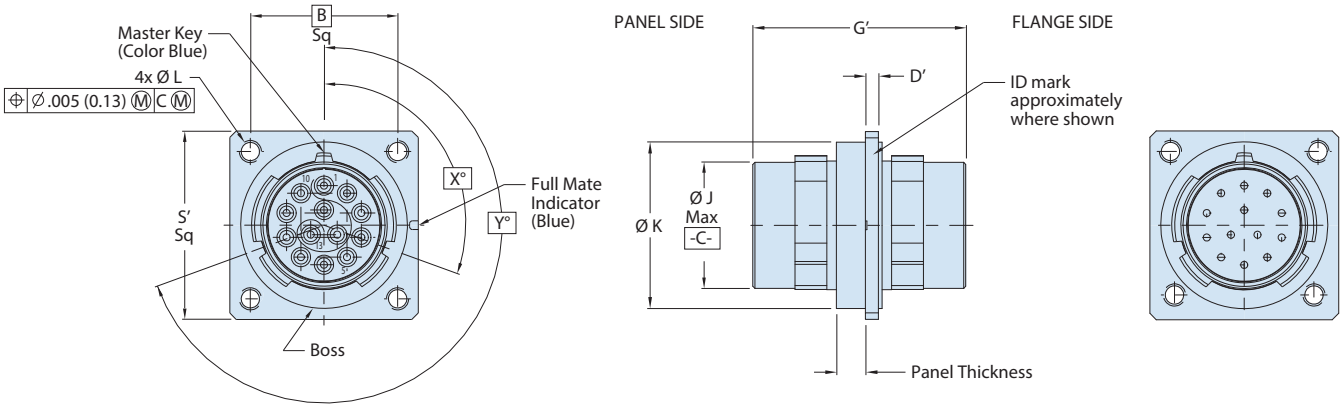

HS - WALL MOUNT RECEPTACLE
STANDARD HELICOIL (SEE TABLE V)

© 2025 Glenair, Inc • 1211 Air Way, Glendale, CA 91201 • 818-247-6000 • www.glenair.com • U.S. CAGE code 06324 • SuperNine Series IV
Dimensions in Inches (millimeters) are subject to change without notice.

MIL-DTL-38999 Series IV Type
234-212-07 Jam nut feed-thru receptacles with PC tails

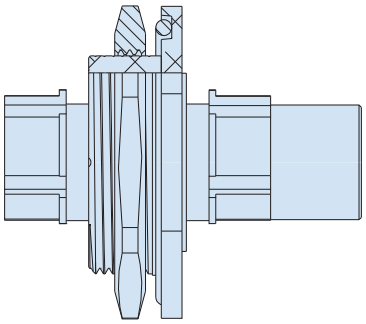

HOW TO ORDER									
Sample Part Number	**234-212**	**-07**	**NF**	**11**	**-35**	**P**	**N**	**S**	**N**

Basic Part Number	**234-212**
Connector Style	**07** = Jam-Nut
Material/Finish	(See Table I)
Shell Size	**11**, **13**, **15**, **17**, **19**, **21**, **23**, **25**
Insert Arrangement	PER MIL-STD-1560
Contact Style	**P** = Pin Contact Panel Side **S** = Socket Contact Panel Side
Alternate Key Positions	**A, B, C, D, K, L, M, R, N** = Normal **U** = Universal (Glenair Equivalent Only)
Contact Style	**P** = Pin Contact Panel Side **S** = Socket Contact Panel Side
Alternate Key Positions	**A, B, C, D, K, L, M, R, N** = Normal **U** = Universal (Glenair Equivalent Only)

"BETTER-THAN-QPL" FEATURES AND BENEFITS

- Secure breech-lock mating connector meets D38999 shock and vibe
- Glenair Signature Tin Zinc finish class is RoHS compliant and cadmium compatible
- Precision-machined key/keyway polarization for reliable mismating protection
- Scoop-proof design prevents pin damage and short circuits
- Fully tooled for all MIL-STD-1560 insert arrangements
- Contact options include size #22D, #20, #16, and #12 (see High-Speed series for Size #8)
- 500 mating cycles exceeds MIL-DTL-38999 specification

TABLE I - MATERIAL/FINISH

Equiv Class	Sym	Material	Finish
W	**NF**	Aluminum Alloy	Cad/O.D. over Electroless Nickel
G*	**MA****		Electroless Nickel, Matte
T*	**MT**		Nickel-PTFE
F	**ME**		Electroless Nickel
AA	**MN**		MegaNickel
V	**TZ**		Tin-Zinc
Z*	**ZR**		Zinc Ni, Black (Tri-Valent CR)
K*	**Z1**	Stainless Steel	Passivate
L*	**ZL**		Electrodeposited Nickel

* = Glenair Equivalent Only

** = Connectors for space applications must be ordered with "MA" finish and mod code "-186T" to conform to the thermal vacuum outgassing requirements of class G.

TABLE II - POLARIZING POSITIONS

	N	A	B	C	D	K	L	M	R	U
X	110°	100°	90°	80°	70°	120°	120°	120°	120°	N/A
Y	250°	260°	270°	280°	290°	255°	265°	275°	285°	N/A

TABLE III - PANEL CUT-OUT

Shell Size	Shell Size Code	ØKK	BB
11	B	1.020 (25.91) 1.010 (25.65)	0.955 (24.26) 0.945 (24.00)
13	C	1.145 (29.08) 1.135 (28.83)	1.085 (27.56) 1.075 (27.31)
15	D	1.270 (32.26) 1.260 (32.00)	1.210 (30.73) 1.200 (30.48)
17	E	1.395 (35.43) 1.385 (35.18)	1.335 (33.91) 1.325 (33.66)
19	F	1.520 (38.61) 1.510 (38.35)	1.460 (37.08) 1.450 (36.83)
21	G	1.645 (41.78) 1.635 (41.53)	1.585 (40.26) 1.575 (40.01)
23	H	1.770 (44.96) 1.760 (44.70)	1.710 (43.43) 1.700 (43.18)
25	J	1.895 (48.13) 1.885 (47.88)	1.835 (46.61) 1.825 (46.36)

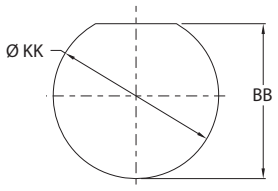

Jam-Nut Receptacle
Recommended panel cut-out

MIL-DTL-38999 Series IV Type
234-212-07 Jam nut feed-thru receptacles with PC tails

JAM NUT RECEPTACLE 234-105-44 (REF: MIL-DTL-38999/44)

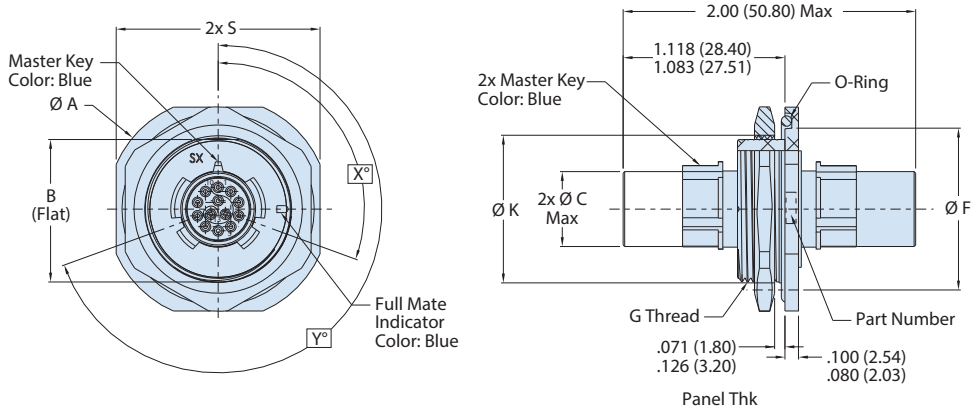

Shell Size	Shell Size Code	ØA	B (Flat)	ØC Max	ØF	G Thread	ØK	S	O-Ring P/N
11	B	1.520 (38.6) 1.480 (37.6)	.942 (23.93) .935 (23.74)	.509 (12.93)	1.096 (27.84) 1.085 (27.55)	M25 X 1.0-6g 0.100R	1.000 (25.40) .990 (25.15)	1.394 (35.4) 1.354 (34.4)	AS3582-024
13	C	1.642 (41.7) 1.602 (40.7)	1.066 (27.08) 1.059 (26.89)	.634 (16.10)	1.221 (31.02) 1.210 (30.73)	M28 X 1.0-6g 0.100R	1.125 (28.58) 1.115 (28.33)	1.520 (38.6) 1.480 (37.6)	AS3582-026
15	D	1.768 (44.9) 1.728 (43.9)	1.191 (30.26) 1.184 (30.07)	.759 (19.28)	1.346 (34.19) 1.335 (33.90)	M31 X 1.0-6g 0.100R	1.250 (31.75) 1.240 (31.50)	1.642 (41.7) 1.602 (40.7)	AS3582-028
17	E	1.957 (49.7) 1.917 (48.7)	1.321 (33.56) 1.314 (33.37)	.885 (22.48)	1.483 (37.67) 1.472 (37.38)	M34 X 1.0-6g 0.100R	1.375 (34.92) 1.365 (34.67)	1.799 (45.7) 1.760 (44.7)	AS3582-029
19	F	2.035 (51.7) 1.996 (50.7)	1.441 (36.61) 1.434 (36.42)	1.009 (25.63)	1.608 (40.85) 1.597 (40.56)	M38 X 1.0-6g 0.100R	1.500 (38.10) 1.490 (37.85)	1.909 (48.5) 1.870 (47.5)	AS3582-030
21	G	2.157 (54.8) 2.118 (53.8)	1.566 (39.78) 1.559 (39.59)	1.134 (28.80)	1.733 (44.02) 1.722 (43.73)	M41 X 1.0-6g 0.100R	1.625 (41.28) 1.615 (41.03)	2.035 (51.7) 1.996 (50.7)	AS3582-031
23	H	2.283 (58.0) 2.244 (57.0)	1.691 (42.96) 1.684 (42.77)	1.259 (31.98)	1.858 (47.20) 1.847 (46.91)	M44 X 1.0-6g 0.100R	1.750 (44.45) 1.740 (44.20)	2.157 (54.8) 2.118 (53.8)	AS3582-032
25	J	2.409 (61.2) 2.370 (60.2)	1.816 (46.13) 1.809 (45.94)	1.384 (35.15)	1.983 (50.37) 1.972 (50.08)	M47 X 1.0-6g 0.100R	1.875 (47.63) 1.865 (47.38)	2.283 (58.0) 2.244 (57.0)	AS3582-033

NOTES

1. Materials And Finishes (As Applicable):
   - Shell - Jam Nut (See Table I)
   - Insulator - High Grade Rigid Dielectric.
   - Contacts - IAW AS39029
   - Seals - Fluorosilicone Blend.
2. Insert arrangement in accordance with MIL-STD-1560. Contact factory for additional insert arrangements.
3. Insert arrangement shown is for reference only.
4. Glenair 234-212-07 series connectors are designed to meet the applicable performance and interface requirements of MIL-DTL-38999, Series IV except as noted. Connector mates with any QPL manufacturer's MIL-DTL-38999 Series IV connectors with the same insert arrangement and polarization.
5. Power given to contact on one end will result in power to contact directly opposite regardless of identification letter.
6. Electrical safety limits must be established by user. Peak voltage, switching surge, and transient etc, should be used to detrmine the safety application.

© 2025 Glenair, Inc • 1211 Air Way, Glendale, CA 91201 • 818-247-6000 • www.glenair.com • U.S. CAGE code 06324 • SuperNine Series IV
Dimensions in Inches (millimeters) are subject to change without notice.

SuperNine® Series IV Environmental

MIL-DTL-38999 Series IV Type
234-213 Sav-Con® plug/receptacle connector saver

HOW TO ORDER

Sample Part Number	234-213	NF	11	-35	P	N	S	N

Basic Part Number	**234-213**
Material/Finish	(See Table I)
Shell Size	**11**, **13**, **15**, **17**, **19**, **21**, **23**, **25**
Insert Arrangement	PER MIL-STD-1560
Contact Style (Plug side)	**P** = Pin, Gold, 1500 Cycles **S** = Socket, Gold, 1500 Cycles **H** = Pin, Pd/Ni, 1500 Cycles **J** = Socket, Pd/Ni, 1500 Cycles
Shell Polarization (Plug side)	**A, B, C, D, K, L, M, R, N** = Normal, **U** = Universal
Contact Style (Receptacle side)	**P** = Pin **S** = Socket
Shell Polarization (Receptacle side)	**A, B, C, D, K, L, M, R, N** = Normal, **U** = Universal

"BETTER-THAN-QPL" FEATURES AND BENEFITS

- Secure breech-lock mating connector meets D38999 shock and vibe
- Improved plug ground fingers deliver outstanding EMI performance—equal to D38999 Series III
- Glenair Signature Tin Zinc finish class is RoHS compliant and cadmium compatible
- Precision-machined key/keyway polarization for reliable mismating protection
- Scoop-proof design prevents pin damage and short circuits
- Fully tooled for all MIL-STD-1560 insert arrangements
- Contact options include size #22D, #20, #16, and #12 (see High-Speed series for Size #8)
- 500 mating cycles exceeds MIL-DTL-38999 specification

TABLE I - MATERIAL/FINISH

Equiv Class	Sym	Material	Finish
W	**NF**	Aluminum Alloy	Cad/O.D. over Electroless Nickel
G*	**MA****		Electroless Nickel, Matte
T*	**MT**		Nickel-PTFE
F	**ME**		Electroless Nickel
AA	**MN**		MegaNickel
V	**TZ**		Tin-Zinc
Z*	**ZR**		Zinc Ni, Black (Tri-Valent CR)
K*	**Z1**	Stainless Steel	Passivate
L*	**ZL**		Electrodeposited Nickel

* = Glenair Equivalent Only

** = Connectors for space applications must be ordered with "MA" finish and mod code "-186T" to conform to the thermal vacuum outgassing requirements of class G.

TABLE VII - POLARIZING POSITIONS

	N	A	B	C	D	K	L	M	R
X	110°	100°	90°	80°	70°	120°	120°	120°	120°
Y	250°	260°	270°	280°	290°	255°	265°	275°	285°

MIL-DTL-38999 Series IV Type
234-213 Sav-Con® plug/receptacle connector saver

NOTES

1. Materials And Finishes (As Applicable):
   - Shell - See Table I
   - Insulator - High Grade Rigid Dielectric.
   - O-Ring - Silicone.
   - Contacts - Copper Alloy/ Gold Plated (w/ SST Skt Hood)
   - Seals - Fluorosilicone Blend.
2. Glenair 234-213 Series connectors savers are designed to mate with any QPL manufacturer's MIL-DTL-38999 Series IV connectors with same size insert arrangement and polarization.
3. Insert arrangement in accordance with MIL-STD-1560. Contact factory for additional insert arrangements.
4. Alternate polarization "U" (Universal) is a non-standard/ non-mil-spec option which allows for mating to any QPL manufacturer's MIL-DTL-38999, Series IV connector having the same shell size, insert arrangement and mating contact size. Universal connectors are intended for use in testing facilities only and should be highly evaluated before consideration in another environment.
5. Power to a given contact on one end will result in power to a contact directly opposite, regardless of identification letter.
6. Electrical safety limits must be established by user. Peak voltage, switching surge, and transient etc, should be used to detrmine the safety application.

234-213 DIMENSIONS

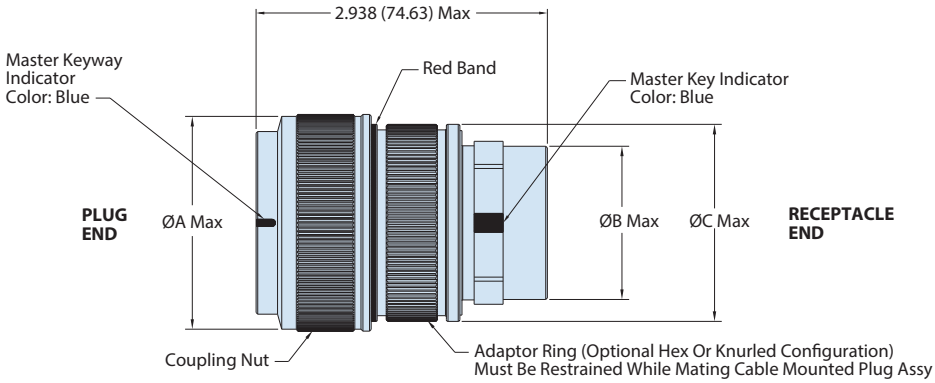

Shell Size	ØA Max	ØB Max	ØC Max.
11	1.054 (26.77)	0.509 (12.93)	0.926 (23.52)
13	1.226 (31.14)	0.634 (16.10)	1.040 (26.42)
15	1.351 (34.32)	0.759 (19.28)	1.165 (29.59)
17	1.478 (37.54)	0.885 (22.48)	1.290 (32.77)
19	1.586 (40.28)	1.009 (25.63)	1.425 (36.20)
21	1.711 (43.46)	1.134 (28.80)	1.550 (39.37)
23	1.836 (46.63)	1.259 (31.98)	1.686 (42.82)
25	1.964 (49.89)	1.384 (35.15)	1.800 (45.72)

© 2025 Glenair, Inc • 1211 Air Way, Glendale, CA 91201 • 818-247-6000 • www.glenair.com • U.S. CAGE code 06324 • SuperNine Series IV
Dimensions in Inches (millimeters) are subject to change without notice.

SuperNine® Series IV Environmental

MIL-DTL-38999 Series IV Type
234-217 High-speed plug, and panel mount and jam nut receptacles

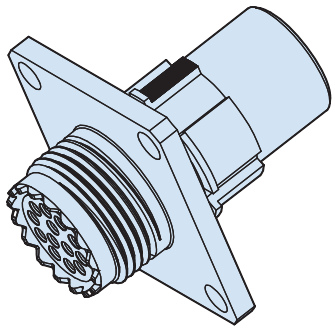

HOW TO ORDER

Sample Part Number	234-217	G6	NF	25	-	8	A	N	-909CP

Basic Part Number	**234-217**
Connector Style	(See Table II)
Material/Finish	(See Table I)
Shell Size	**11**, **13**, **15**, **17**, **19**, **21**, **23**, **25**
Ground Option	**G** = Common Ground **-** = None
Insert Arrangement	PER MIL-STD-1560
Insert Designator	**A** = Pin Insert, less contacts **B** = Socket Insert, less contacts
Alternate Polarization	**A**, **B**, **C**, **D**, **E**, **N** = Normal, **U** = Universal
Optional Mod Code	**909**** = Supplies connector with contacts **1213** = Supplies connector with contacts per MIL-STD-1560

"BETTER-THAN-QPL" FEATURES AND BENEFITS

- Secure breech-lock mating connector meets D38999 shock and vibe
- Improved plug ground fingers deliver outstanding EMI performance—equal to D38999 Series III
- Glenair Signature Tin Zinc finish class is RoHS compliant and cadmium compatible
- Precision-machined key/keyway polarization for reliable mismating protection
- Scoop-proof design prevents pin damage and short circuits
- Fully tooled for all MIL-STD-1560 insert arrangements
- Contact options include size #22D, #20, #16, and #12 (see High-Speed series for Size #8)
- 500 mating cycles exceeds MIL-DTL-38999 specification

TABLE I - MATERIAL/FINISH

Equiv Class	Sym	Material	Finish
W	**NF**	Aluminum Alloy	Cad/O.D. over Electroless Nickel
G*	**MA****		Electroless Nickel, Matte
T*	**MT**		Nickel-PTFE
F	**ME**		Electroless Nickel
AA	**MN**		MegaNickel
V	**TZ**		Tin-Zinc
Z*	**ZR**		Zinc Ni, Black (Tri-Valent CR)
K*	**Z1**	Stainless Steel	Passivate
L*	**ZL**		Electrodeposited Nickel

* = Glenair Equivalent Only

** = Connectors for space applications must be ordered with "MA" finish and mod code "-186T" to conform to the thermal vacuum outgassing requirements of class G.

TABLE B - POLARIZING POSITIONS

	N	A	B	C	D	K	L	M	R	U
X	110°	100°	90°	80°	70°	120°	120°	120°	120°	N/A
Y	250°	260°	270°	280°	290°	255°	265°	275°	285°	N/A

TABLE II - CONNECTOR STYLE

Sym	Description
D0	Receptacle wall-mount thru hole MIL-DTL-38999/40
07	Receptacle Jam Nut MIL-DTL-38999/44
G6	Plug connector EMI spring MIL-DTL-38999/46
CM	Receptacle, wall-mount with metric clinch nut
CS	Receptacle, wall-mount with standard clinch nuts
HM	Receptacle, wall-mount with metric helicoils
HS	Receptacle, wall-mount with standard helicoils

MIL-DTL-38999 Series IV Type
234-217 High-speed plug, and panel mount and jam nut receptacles

WALL MOUNT RECEPTACLE 234-105-40 REF: MIL-DTL-38999/40

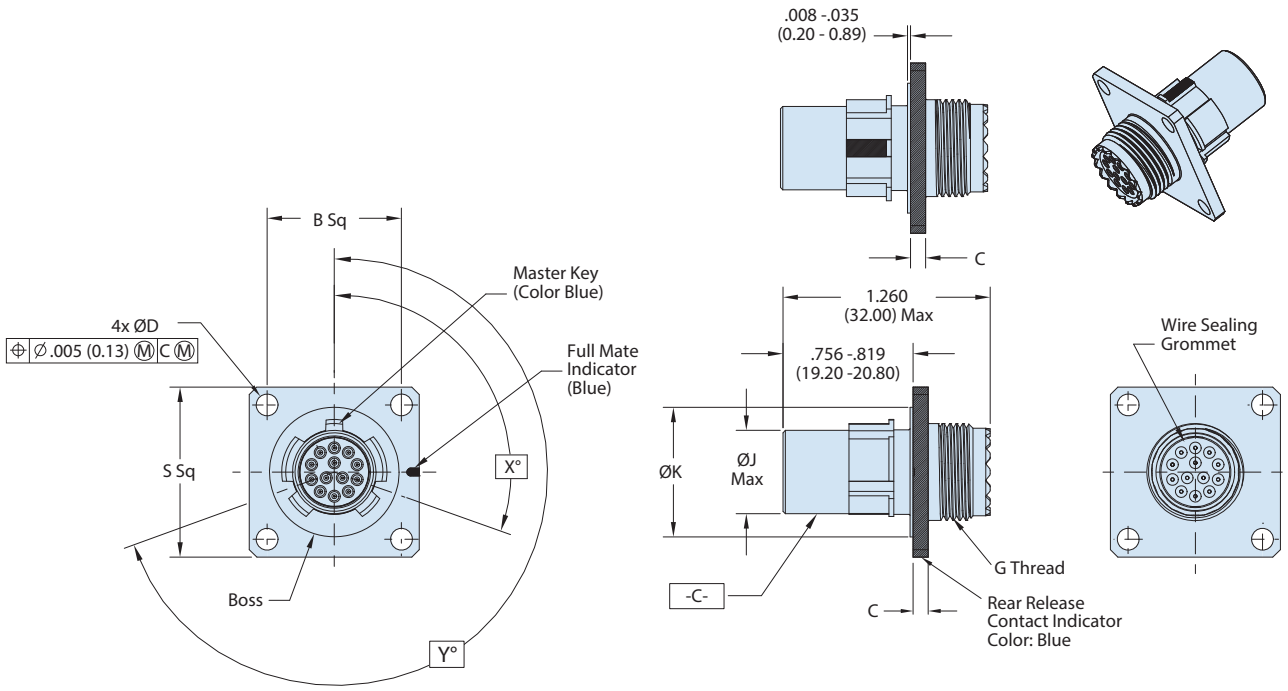

D0 WALL MOUNT RECEPTACLE
(REF: MIL-DTL-38999/40)

Shell Size	Shell Size Code	B Bsc	C	ØD	G Thread	ØJ Max	ØK	S
11	B	.812 (20.62)	.102 (2.6) .083 (2.1)	.138 (3.5) .122 (3.1)	M15 X 1.0-6g 0.100R	.509 (12.93)	.793 (20.15) .778 (19.76)	1.051 (26.7) 1.008 (25.6)
13	C	.906 (23.02)	.102 (2.6) .083 (2.1)	.138 (3.5) .122 (3.1)	M18 X 1.0-6g 0.100R	.634 (16.10)	.913 (23.35) .904 (22.96)	1.146 (29.1) 1.102 (28.0)
15	D	.969 (24.61)	.102 (2.6) .083 (2.1)	.138 (3.5) .122 (3.1)	M22 X 1.0-6g 0.100R	.759 (19.28)	1.044 (26.52) 1.029 (26.13)	1.240 (31.5) 1.197 (30.4)
17	E	1.062 (26.98)	.102 (2.6) .083 (2.1)	.138 (3.5) .122 (3.1)	M25 X 1.0-6g 0.100R	.885 (22.48)	1.170 (29.72) 1.155 (29.33)	1.335 (33.9) 1.291 (32.8)
19	F	1.156 (29.36)	.102 (2.6) .083 (2.1)	.138 (3.5) .122 (3.1)	M28 X 1.0-6g 0.100R	1.009 (25.63)	1.294 (32.87) 1.279 (32.48)	1.461 (37.1) 1.417 (36.0)
21	G	1.250 (31.76)	.134 (3.4) .114 (2.9)	.138 (3.5) .122 (3.1)	M31 X 1.0-6g 0.100R	1.134 (28.80)	1.419 (36.05) 1.404 (35.66)	1.583 (40.2) 1.539 (39.1)
23	H	1.375 (34.93)	.134 (3.4) .114 (2.9)	.157 (4.0) .142 (3.6)	M34 X 1.0-6g 0.100R	1.259 (31.98)	1.544 (39.22) 1.529 (38.83)	1.709 (43.4) 1.665 (42.3)
25	J	1.500 (38.10)	.134 (3.4) .114 (2.9)	.157 (4.0) .142 (3.6)	M37 X 1.0-6g 0.100R	1.384 (35.15)	1.669 (42.40) 1.654 (42.01)	1.835 (46.6) 1.791 (45.5)

© 2025 Glenair, Inc • 1211 Air Way, Glendale, CA 91201 • 818-247-6000 • www.glenair.com • U.S. CAGE code 06324 • SuperNine Series IV
Dimensions in Inches (millimeters) are subject to change without notice.

MIL-DTL-38999 Series IV Type
234-217 High-speed plug, and panel mount and jam nut receptacles

WALL MOUNT RECEPTACLE 234-105-40 REF: MIL-DTL-38999/40

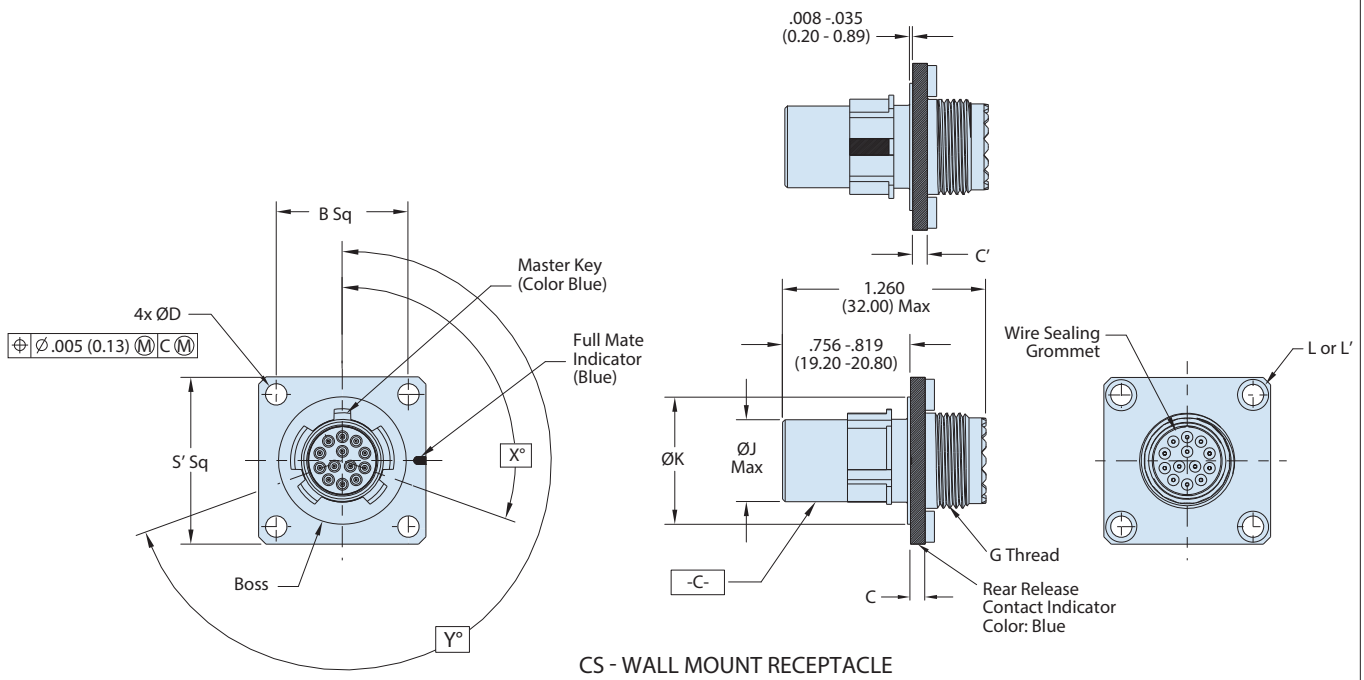

CS - WALL MOUNT RECEPTACLE
WITH STANDARD CLINCH NUTS
OR
CM - WALL MOUNT RECEPTACLE
WITH METRIC CLINCH NUTS

Shell Size	Shell Size Code	B Bsc	C	C'	G Thread	ØJ Max	ØK	L Thread	L' Thread	S	S'
11	B	.812 (20.62)	.102 (2.6) .083 (2.1)	.179 (4.5) .140 (3.6)	M15 X 1.0-6g 0.100R	.509 (12.93)	.793 (20.15) .778 (19.76)	.112-40 UNC	M3 X 0.5	1.051 (26.7) 1.008 (25.6)	1.202 (30.5) 1.162 (29.5)
13	C	.906 (23.02)	.102 (2.6) .083 (2.1)		M18 X 1.0-6g 0.100R	.634 (16.10)	.913 (23.35) .904 (22.96)			1.146 (29.1) 1.102 (28.0)	1.296 (32.8) 1.256 (31.9)
15	D	.969 (24.61)	.102 (2.6) .083 (2.1)		M22 X 1.0-6g 0.100R	.759 (19.28)	1.044 (26.52) 1.029 (26.13)			1.240 (31.5) 1.197 (30.4)	1.359 (34.5) 1.319 (33.5)
17	E	1.062 (26.98)	.102 (2.6) .083 (2.1)		M25 X 1.0-6g 0.100R	.885 (22.48)	1.170 (29.72) 1.155 (29.33)			1.335 (33.9) 1.291 (32.8)	1.452 (36.9) 1.412 (35.9)
19	F	1.156 (29.36)	.102 (2.6) .083 (2.1)		M28 X 1.0-6g 0.100R	1.009 (25.63)	1.294 (32.87) 1.279 (32.48)			1.461 (37.1) 1.417 (36.0)	1.546 (39.3) 1.506 (38.3)
21	G	1.250 (31.76)	.134 (3.4) .114 (2.9)		M31 X 1.0-6g 0.100R	1.134 (28.80)	1.419 (36.05) 1.404 (35.66)			1.583 (40.2) 1.539 (39.1)	1.640 (41.7) 1.600 (40.6)
23	H	1.375 (34.93)	.134 (3.4) .114 (2.9)	.190 (4.8) .170 (4.3)	M34 X 1.0-6g 0.100R	1.259 (31.98)	1.544 (39.22) 1.529 (38.83)	.138-32 UNC	M4 X 0.7	1.709 (43.4) 1.665 (42.3)	1.765 (44.8) 1.725 (43.8)
25	J	1.500 (38.10)	.134 (3.4) .114 (2.9)		M37 X 1.0-6g 0.100R	1.384 (35.15)	1.669 (42.40) 1.654 (42.01)			1.835 (46.6) 1.791 (45.5)	1.890 (48.0) 1.850 (47.0)

© 2025 Glenair, Inc • 1211 Air Way, Glendale, CA 91201 • 818-247-6000 • www.glenair.com • U.S. CAGE code 06324 • SuperNine Series IV
Dimensions in Inches (millimeters) are subject to change without notice.

MIL-DTL-38999 Series IV Type
234-217 High-speed plug, and panel mount and jam nut receptacles

WALL MOUNT RECEPTACLE 234-105-40 REF: MIL-DTL-38999/40

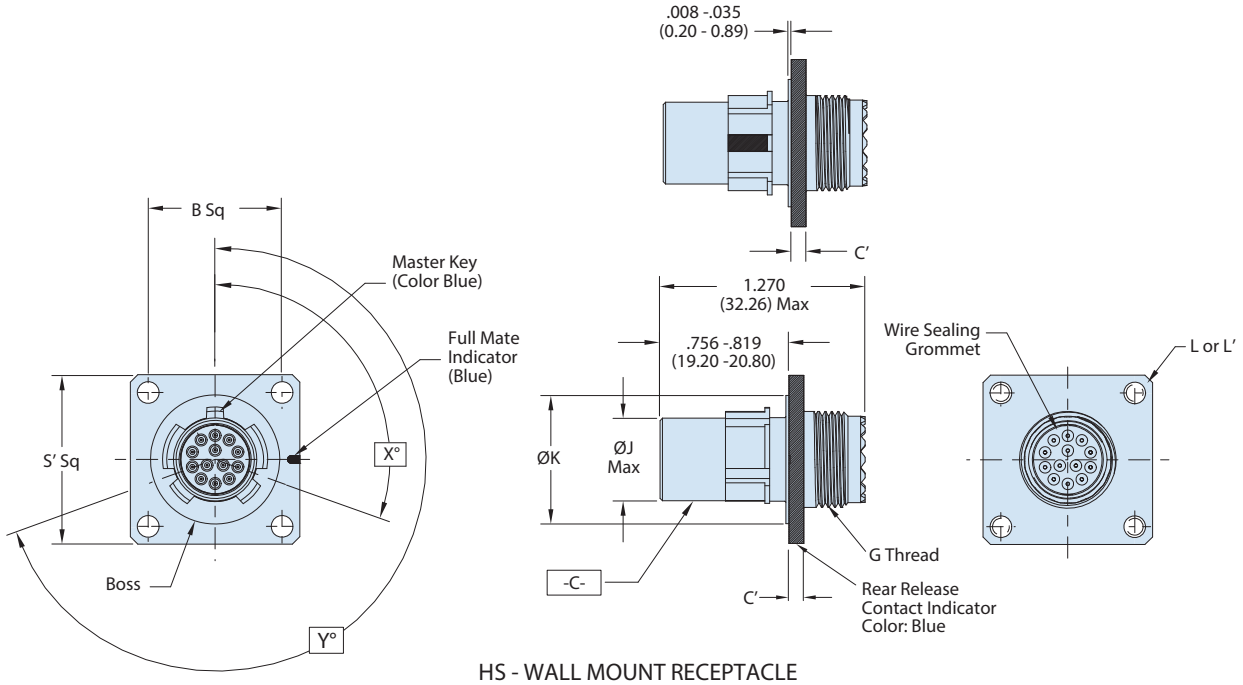

HS - WALL MOUNT RECEPTACLE
WITH STANDARD HELICOILS
OR
HM - WALL MOUNT RECEPTACLE
WITH METRIC HELICOILS

Shell Size	Shell Size Code	B Bsc	C	C'	G Thread	ØJ Max	ØK	L Thread	L' Thread	S	S'
11	B	.812 (20.62)	.102 (2.6) .083 (2.1)	.179 (4.5) .140 (3.6)	M15 X 1.0-6g 0.100R	.509 (12.93)	.793 (20.15) .778 (19.76)	.112-40 UNC	M3 X 0.5	1.051 (26.7) 1.008 (25.6)	1.202 (30.5) 1.162 (29.5)
13	C	.906 (23.02)	.102 (2.6) .083 (2.1)		M18 X 1.0-6g 0.100R	.634 (16.10)	.913 (23.35) .904 (22.96)			1.146 (29.1) 1.102 (28.0)	1.296 (32.8) 1.256 (31.9)
15	D	.969 (24.61)	.102 (2.6) .083 (2.1)		M22 X 1.0-6g 0.100R	.759 (19.28)	1.044 (26.52) 1.029 (26.13)			1.240 (31.5) 1.197 (30.4)	1.359 (34.5) 1.319 (33.5)
17	E	1.062 (26.98)	.102 (2.6) .083 (2.1)		M25 X 1.0-6g 0.100R	.885 (22.48)	1.170 (29.72) 1.155 (29.33)			1.335 (33.9) 1.291 (32.8)	1.452 (36.9) 1.412 (35.9)
19	F	1.156 (29.36)	.102 (2.6) .083 (2.1)		M28 X 1.0-6g 0.100R	1.009 (25.63)	1.294 (32.87) 1.279 (32.48)			1.461 (37.1) 1.417 (36.0)	1.546 (39.3) 1.506 (38.3)
21	G	1.250 (31.76)	.134 (3.4) .114 (2.9)		M31 X 1.0-6g 0.100R	1.134 (28.80)	1.419 (36.05) 1.404 (35.66)			1.583 (40.2) 1.539 (39.1)	1.640 (41.7) 1.600 (40.6)
23	H	1.375 (34.93)	.134 (3.4) .114 (2.9)	.190 (4.8) .170 (4.3)	M34 X 1.0-6g 0.100R	1.259 (31.98)	1.544 (39.22) 1.529 (38.83)	.138-32 UNC	M4 X 0.7	1.709 (43.4) 1.665 (42.3)	1.765 (44.8) 1.725 (43.8)
25	J	1.500 (38.10)	.134 (3.4) .114 (2.9)		M37 X 1.0-6g 0.100R	1.384 (35.15)	1.669 (42.40) 1.654 (42.01)			1.835 (46.6) 1.791 (45.5)	1.890 (48.0) 1.850 (47.0)

© 2025 Glenair, Inc • 1211 Air Way, Glendale, CA 91201 • 818-247-6000 • www.glenair.com • U.S. CAGE code 06324 • SuperNine Series IV
Dimensions in Inches (millimeters) are subject to change without notice.

MIL-DTL-38999 Series IV Type
234-217 High-speed plug, and panel mount and jam nut receptacles

JAM NUT RECEPTACLE 234-105-44 (REF: MIL-DTL-38999/44)

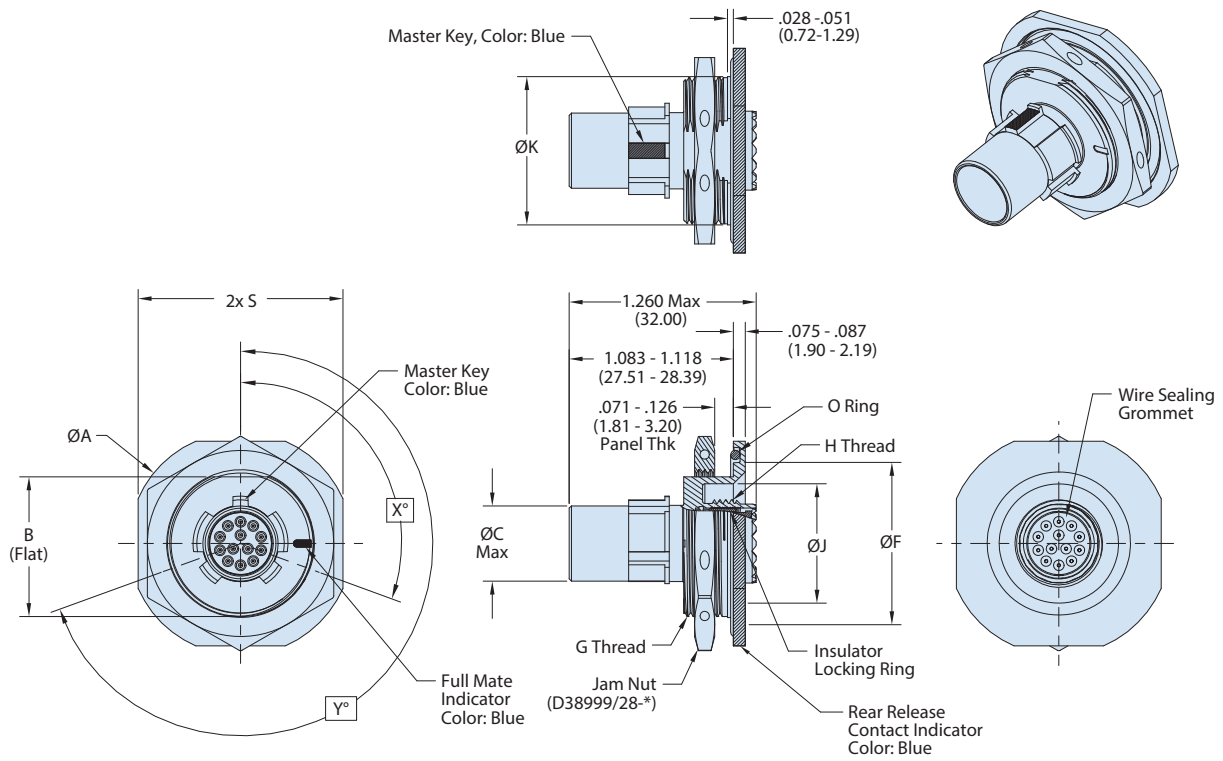

07 JAM-NUT RECEPTACLE
(REF: MIL-DTL-38999/44)

Shell Size	Shell Size Code	Øa	B (Flat)	Øc Max	Øf	G Thread	H Thread	Øj	Øk	S	O-Ring P/N
11	B	1.520 (38.6) 1.480 (37.6)	.942 (23.93) .935 (23.74)	.509 (12.93)	1.096 (27.84) 1.085 (27.55)	M25 X 1.0-6g 0.100R	M15 X 1.0-6g 0.100R	.804 (20.42) .794 (20.17)	1.000 (25.40) .990 (25.15)	1.394 (35.4) 1.354 (34.4)	AS3582-024
13	C	1.642 (41.7) 1.602 (40.7)	1.066 (27.08) 1.059 (26.89)	.634 (16.10)	1.221 (31.02) 1.210 (30.73)	M28 X 1.0-6g 0.100R	M18 X 1.0-6g 0.100R	.928 (23.57) .918 (23.32)	1.125 (28.58) 1.115 (28.33)	1.520 (38.6) 1.480 (37.6)	AS3582-026
15	D	1.768 (44.9) 1.728 (43.9)	1.191 (30.26) 1.184 (30.07)	.759 (19.28)	1.346 (34.19) 1.335 (33.90)	M31 X 1.0-6g 0.100R	M22 X 1.0-6g 0.100R	1.046 (26.56) 1.036 (26.31)	1.250 (31.75) 1.240 (31.50)	1.642 (41.7) 1.602 (40.7)	AS3582-028
17	E	1.957 (49.7) 1.917 (48.7)	1.321 (33.56) 1.314 (33.37)	.885 (22.48)	1.483 (37.67) 1.472 (37.38)	M34 X 1.0-6g 0.100R	M25 X 1.0-6g 0.100R	1.182 (30.02) 1.172 (29.77)	1.375 (34.92) 1.365 (34.67)	1.799 (45.7) 1.760 (44.7)	AS3582-029
19	F	2.035 (51.7) 1.996 (50.7)	1.441 (36.61) 1.434 (36.42)	1.009 (25.63)	1.608 (40.85) 1.597 (40.56)	M38 X 1.0-6g 0.100R	M28 X 1.0-6g 0.100R	1.296 (32.91) 1.286 (32.66)	1.500 (38.10) 1.490 (37.85)	1.909 (48.5) 1.870 (47.5)	AS3582-030
21	G	2.157 (54.8) 2.118 (53.8)	1.566 (39.78) 1.559 (39.59)	1.134 (28.80)	1.733 (44.02) 1.722 (43.73)	M41 X 1.0-6g 0.100R	M31 X 1.0-6g 0.100R	1.422 (36.11) 1.412 (35.86)	1.625 (41.28) 1.615 (41.03)	2.035 (51.7) 1.996 (50.7)	AS3582-031
23	H	2.283 (58.0) 2.244 (57.0)	1.691 (42.96) 1.684 (42.77)	1.259 (31.98)	1.858 (47.20) 1.847 (46.91)	M44 X 1.0-6g 0.100R	M34 X 1.0-6g 0.100R	1.546 (39.26) 1.536 (39.01)	1.750 (44.45) 1.740 (44.20)	2.157 (54.8) 2.118 (53.8)	AS3582-032
25	J	2.409 (61.2) 2.370 (60.2)	1.816 (46.13) 1.809 (45.94)	1.384 (35.15)	1.983 (50.37) 1.972 (50.08)	M47 X 1.0-6g 0.100R	M37 X 1.0-6g 0.100R	1.672 (42.46) 1.662 (42.21)	1.875 (47.63) 1.865 (47.38)	2.283 (58.0) 2.244 (57.0)	AS3582-033

© 2025 Glenair, Inc • 1211 Air Way, Glendale, CA 91201 • 818-247-6000 • www.glenair.com • U.S. CAGE code 06324 • SuperNine Series IV
Dimensions in Inches (millimeters) are subject to change without notice.

MIL-DTL-38999 Series IV Type
234-217 High-speed plug, and panel mount and jam nut receptacles

PLUG 234-105-46 OR 47 REF: MIL-DTL-38999/46 OR 47

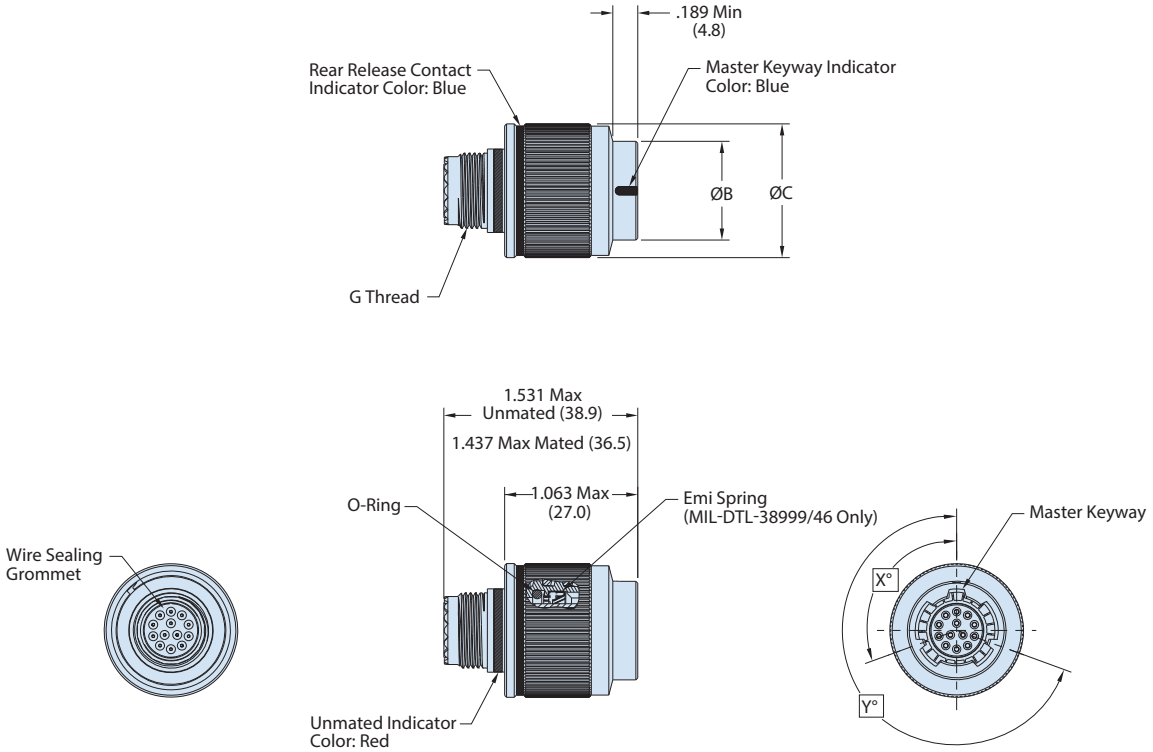

PLUG
(REF: MIL-DTL-38999/46 AND /47)

Shell Size	Shell Size Code	ØB Max	ØC Max	G Thread
11	B	.776 (19.7)	1.047 (26.6)	M15 X 1.0-6g 0.100R
13	C	.902 (22.9)	1.220 (31.0)	M18 X 1.0-6g 0.100R
15	D	1.039 (26.4)	1.346 (34.2)	M22 X 1.0-6g 0.100R
17	E	1.150 (29.2)	1.472 (37.4)	M25 X 1.0-6g 0.100R
19	F	1.276 (32.4)	1.583 (40.2)	M28 X 1.0-6g 0.100R
21	G	1.402 (35.6)	1.705 (43.3)	M31 X 1.0-6g 0.100R
23	H	1.528 (38.8)	1.831 (46.5)	M34 X 1.0-6g 0.100R
25	J	1.650 (41.9)	1.957 (49.7)	M37 X 1.0-6g 0.100R

© 2025 Glenair, Inc • 1211 Air Way, Glendale, CA 91201 • 818-247-6000 • www.glenair.com • U.S. CAGE code 06324 • SuperNine Series IV
Dimensions in Inches (millimeters) are subject to change without notice.

MIL-DTL-38999 Series IV Type
234-217 High-speed plug, and panel mount and jam nut receptacles ins. arrangements

HIGH-SPEED AND HYBRID INSERT ARRANGEMENTS

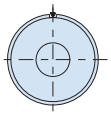

Arrangement 9G5
1x Size 8
(Common Ground Only)

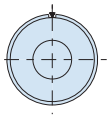

Arrangement 11-1
1x Size 8

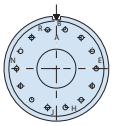

Arrangement 13-14
1x Size 8
14x Size 23

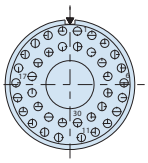

Arrangement 17-2
1x Size 8
38x Size 22

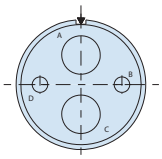

Arrangement 17-22
2x Size 8
2x Size 12

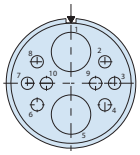

Arrangement 17-60
2x Size 8
8x Size 22

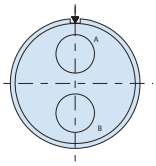

Arrangement 17-75
2x Size 8

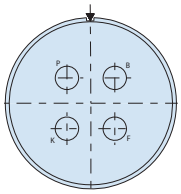

Arrangement 19-4
4x Size 8

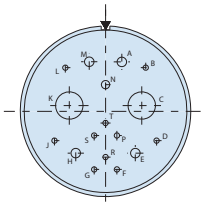

Arrangement 19-17
10x Size 22D
1x Size 20
4x Size 16
2x Size 8

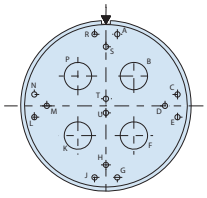

Arrangement 19-18
14x Size 22D
4x Size 8

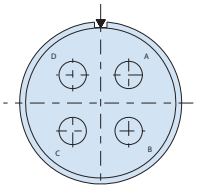

Arrangement 21-75
4x Size 8

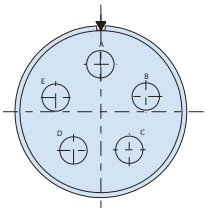

Arrangement 23-5
5x Size 8

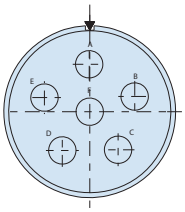

Arrangement 23-6
6x Size 8

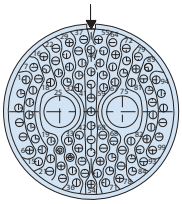

Arrangement 25-7
97x Size 22
2x Size 8

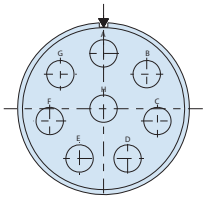

Arrangement 25-8
8x Size 8

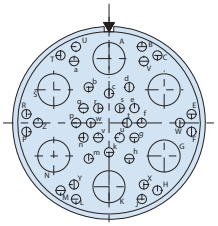

Arrangement 25-17
36x Size 22
6x Size 8

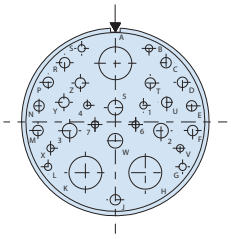

Arrangement 25-20
10x Size 20
13x Size 16
4x Size 12
3x Size 8

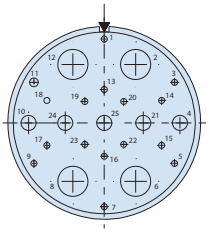

Arrangement 25-26
16x Size 20
5x Size 12
4x Size 8

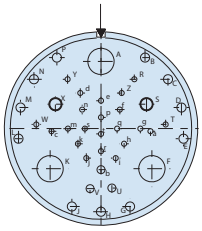

Arrangement 25-41
22x Size 22D
3x Size 20
11x Size 16
2x Size 12
3x Size 8

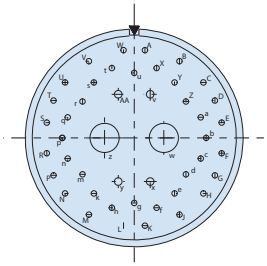

Arrangement 25-46
40x Size 20
4x Size 16
2x Size 8

Insert arrangements, mating face of pin insert shown. Replace X with C, D, E,Q, P, or T (See Table III).

CONTACT INNER PIN ORIENTATION

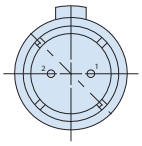

Diferental
Twinax

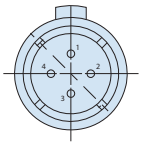

Quadrax

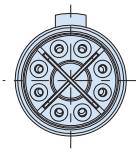

El Ochito

MIL-DTL-38999 Series IV Type
234-217 High-speed plug, and panel mount and jam nut receptacles contact ref.

TABLE III - CONTACT REFERENCE GUIDE

Symbol	Description	Glenair P/N	Contact Size	Accomodates AWG Size	Wire Type	Grommet Follower P/N	Application Notes
C	Coax Per M39029/76 M39029/77	Pin: 852-008-16-424 Socket: 852-009-16-428	16	Coax Cable	RG174, RG316, RG179	N/A	Analog Radio Frequency Or Microwave Applications
	Coax Per M39029/102 M39029/103	Pin: 852-004-12-558 Socket: 852-005-12-559	12	Coax Cable	RG174, RG316, RG179	N/A	
	Coax Per M39029/59 M39029/60	Pin: 852-007-08-367 Socket: 852-006-08-366	8	Coax Cable	M17/95-RG180	859-042-02	
C1	Coax, 75 Ohm	Pin: 852-056-01f Socket: 852-057-01f	8	Coax Cable	V73263, V75268, V76261	859-042-01	Analog Radio Frequency Or Microwave Applications
D	Differential Twinax	Pin: 853-014-05 Socket: 853-013-05	8	24 AWG Twinax Cable	M17/176-00002	859-042-01	1553 Databus/ Differential Signal
E*	El Ochito	Pin: 858-003-02 Socket: 858-004-02	8	26 AWG	963-003-26 963-033-26	687-643-8-2	1g/10g Base-T Ethernet (White)
		Pin: 858-028-02 Socket: 858-029-02		24\26-30 AWG	963-110 & 963-118	687-643-8-2	Usb 3.0 (Blue)
		Pin: 858-030-02 Socket: 858-031-02		26-30 AWG	963-033-26	687-643-8-2	Sata 3.0 General High Speed (Red)
P	Power	Pin: 850-014 Socket: 850-013	8	8 AWG	M22759/11 or equiv	859-042-03	Power
Q	Quadrax	Pin: 854-001-02 Socket: 854-002-02	8	24 AWG Quadrax	963-020	859-042-02	10/100base-T Ethernet
T	Triax/ Concentric Twinax	Pin: 853-003-08-625 Socket: 853-004-08-628	8	Twinax Cable	M17/176-00002	859-042-01	1553 Databus

TABLE C - PANEL CUTOUT

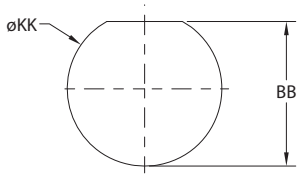

Jam-Nut Receptacle
Recommended panel cut-out

Shell Size	Shell Size Code	ØKK	BB
11	B	1.020 (25.91) 1.010 (25.65)	0.955 (24.26) 0.945 (24.00)
13	C	1.145 (29.08) 1.135 (28.83)	1.085 (27.56) 1.075 (27.31)
15	D	1.270 (32.26) 1.260 (32.00)	1.210 (30.73) 1.200 (30.48)
17	E	1.395 (35.43) 1.385 (35.18)	1.335 (33.91) 1.325 (33.66)
19	F	1.520 (38.61) 1.510 (38.35)	1.460 (37.08) 1.450 (36.83)
21	G	1.645 (41.78) 1.635 (41.53)	1.585 (40.26) 1.575 (40.01)
23	H	1.770 (44.96) 1.760 (44.70)	1.710 (43.43) 1.700 (43.18)
25	J	1.895 (48.13) 1.885 (47.88)	1.835 (46.61) 1.825 (46.36)

© 2025 Glenair, Inc • 1211 Air Way, Glendale, CA 91201 • 818-247-6000 • www.glenair.com • U.S. CAGE code 06324 • SuperNine Series IV
Dimensions in Inches (millimeters) are subject to change without notice.

MIL-DTL-38999 Series IV Type
234-217 High-speed plug, and panel mount and jam nut receptacles panel cutout/notes

TABLE D - PANEL CUTOUT

Shell Size	Shell Size Code	ØKK Min	BB Bsc	ØDD	ØLL Min
11	B	0.796 (20.22)	0.812 (20.62)	.133 (3.38)/.123 (3.12)	0.625 (15.88)
13	C	0.922 (23.42)	0.906 (23.01)		0.750 (19.05)
15	D	1.047 (26.59)	0.969 (24.61)		0.906 (23.01)
17	E	1.219 (30.96)	1.062 (26.97)		1.016 (25.81)
19	F	1.297 (32.94)	1.156 (29.36)		1.141 (28.98)
21	G	1.422 (36.12)	1.250 (31.75)		1.266 (32.16)
23	H	1.547 (39.29)	1.375 (34.93)	.159 (4.04)/.149 (3.78)	1.375 (34.93)
25	J	1.672 (42.47)	1.500 (38.10)	.155 (3.94)/.145 (3.68)	1.484 (37.69)

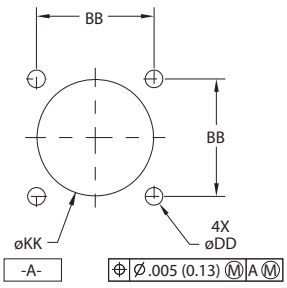

Wall Mount Receptacle
Recommended Panel Cutout
.125 Max Panel Thickness
Back Panel Mount

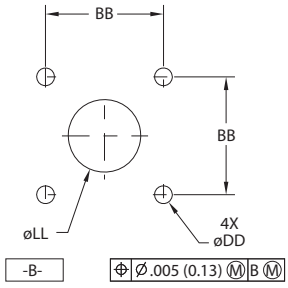

Wall Mount Receptacle
Recommended Panel Cutout
.125 Max Panel Thickness
Front Panel Mount

NOTES

1. Materials And Finishes (As Applicable):
   - Shell - See Table A
   - Insulator - High Grade Rigid Dielectric.
   - O-Ring - Silicone.
   - Contacts - IAW AS39029
   - Seals - Fluorosilicone Blend
2. Insert arrangement in accordance with MIL-STD-1560. Contact factory for additional insert arrangements.
3. Insert arrangement shown is for reference only.
4. Blue color band indicated rear release retention system.
5. Connector supplied with contacts (including spares), insertion/removal tools, and sealing plugs IAW MIL-DTL-38999.
6. Consult factory for crimp tool and accessories selection.
7. See Contact Inner Pin Table for reference orientation of the inner pins relative to connector main key/keyway.
8. Glenair 234-217 series connectors are designed to meet the applicable performance and interface requirements of MIL-DTL-38999, Series IV except as noted. Connector mates with any QPL manufacturer's MIL-DTL-38999 Series IV connectors with the same insert arrangement and polarization.
9. Ground plane option only available for insert arrangements where all contacts are shielded type.
10. Optional mod code 909** can be added to the end of part number to include contacts listed in Table III. See mod code 909 drawing. Combo layouts shall include signal contacts IAW M39029/56 & /58. Contact manufacturer for additional options.
11. Alternate polarization 'U' (Universal) is a non-standard MIL-SPEC option which allows for mating to any QPL manufacturer's MIL-DTL-38999, Series III connector having the same shell size, insert arrangement, and mating contact size. Universal connectors are intended for use in testing facilities only and should be highly evaluated before consideration in another environment.

SuperNine® Series IV Environmental

Glenair®

MIL-DTL-38999 Series IV Type
234-218 High-speed panel mount receptacles, PC tail

ENVIRONMENTAL CONNECTORS

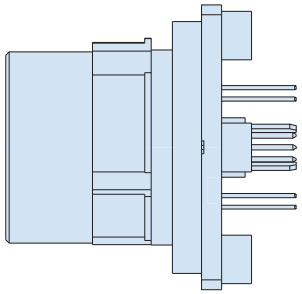

HOW TO ORDER

Sample Part Number	234-218	-00	NF	17	E	-	2	P	N	-909CP

Basic Part Number	**234-218**
Connector Style	**00** = Receptacle, wall-mount through holes **HM** = Receptacle, wall-mount w/metric helicoil **HS** = Receptacle, wall-mount w/standard helicoil **CM** = Receptacle, wall-mount with metric clinch nut **CS** = Receptacle, wall-mount with standard clinch nut
Material/ Finish	(See Table I)
Shell Size	**11**, **13**, **15**, **17**, **19**, **21**, **23**, **25**
Contact Type	(See Table II)
Ground Option	G = Common Ground **-** = None
Insert Arrangement	PER MIL-STD-1560
Insert Designator	**P** = Pin Contacts **S** = Socket Contact
Alternate Key Positions	**A**, **B**, **C**, **D**, **K**, **L**, **M**, **R**, **N** = Normal, **U** = Universal (Glenair equivalent only)
Optional Mod Code	**909**** = Supplies connector with contacts **1213** = Supplies connector with contacts per MIL-STD-1560

"BETTER-THAN-QPL" FEATURES AND BENEFITS

- Secure breech-lock mating connector meets D38999 shock and vibe
- Glenair Signature Tin Zinc finish class is RoHS compliant and cadmium compatible
- Precision-machined key/ keyway polarization for reliable mismating protection
- Scoop-proof design prevents pin damage and short circuits
- Fully tooled for all MIL-STD-1560 insert arrangements
- Contact options include size #22D, #20, #16, and #12 (see High-Speed series for Size #8)
- 500 mating cycles exceeds MIL-DTL-38999 specification

TABLE I - MATERIAL/FINISH

Equiv Class	Sym	Material	Finish
W	**NF**	Aluminum Alloy	Cad/O.D. over Electroless Nickel
G*	**MA****		Electroless Nickel, Matte
T*	**MT**		Nickel-PTFE
F	**ME**		Electroless Nickel
AA	**MN**		MegaNickel
V	**TZ**		Tin-Zinc
Z*	**ZR**		Zinc Ni, Black (Tri-Valent CR)
K*	**Z1**	Stainless Steel	Passivate
L*	**ZL**		Electrodeposited Nickel

* = Glenair Equivalent Only

** = Connectors for space applications must be ordered with "MA" finish and mod code "-186T" to conform to the thermal vacuum outgassing requirements of class G.

TABLE II - CONTACT STYLE

Sym	Description
C	Coax, 50 Ohm
C1	Coax, 75 Ohm
D	Differential Twinax
E*	El Ochito
P	Power
Q	Quadrax
T	Triax/Concentric Twinax
OMIT	Per Mil-Std-1560

© 2025 Glenair, Inc • 1211 Air Way, Glendale, CA 91201 • 818-247-6000 • www.glenair.com • U.S. CAGE code 06324 • SuperNine Series IV
Dimensions in Inches (millimeters) are subject to change without notice.

SuperNine® Series IV Environmental

MIL-DTL-38999 Series IV Type
234-218 High-speed panel mount receptacles, PC tail

TABLE III - OCHITO POSITIONS
B = BLUE, R = RED, W = WHITE

SYM	Contact 1	Contact 2	Contact 3	Contact 4	Contact 5	Contact 6	Contact 7	Contact 8
E	W	W	W	W	W	W	W	W
E2	B	W	W	W	W	W	W	W
E3	R	W	W	W	W	W	W	W
E4	B	B	W	W	W	W	W	W
E5	R	B	W	W	W	W	W	W
E6	R	R	W	W	W	W	W	W
E7	B	B	B	W	W	W	W	W
E8	R	B	B	W	W	W	W	W
E9	R	R	B	W	W	W	W	W
E10	R	R	R	W	W	W	W	W
E11	B	B	B	B	W	W	W	W
E12	R	B	B	B	W	W	W	W
E13	R	R	B	B	W	W	W	W
E14	R	R	R	B	W	W	W	W
E15	R	R	R	R	W	W	W	W
E16	B	B	B	B	B	W	W	W
E17	R	B	B	B	B	W	W	W
E18	R	R	B	B	B	W	W	W
E19	R	R	R	B	B	W	W	W
E20	R	R	R	R	B	W	W	W
E21	R	R	R	R	R	W	W	W
E22	B	B	B	B	B	B	W	W
E23	R	B	B	B	B	B	W	W
E24	R	R	B	B	B	B	W	W
E25	R	R	R	B	B	B	W	W
E26	R	R	R	R	B	B	W	W
E27	R	R	R	R	R	B	W	W
E28	R	R	R	R	R	R	W	W
E29	B	B	B	B	B	B	B	W
E30	R	B	B	B	B	B	B	W
E31	R	R	B	B	B	B	B	W
E32	R	R	R	B	B	B	B	W
E33	R	R	R	R	B	B	B	W
E34	R	R	R	R	R	B	B	W
E35	R	R	R	R	R	R	B	W
E36	R	R	R	R	R	R	R	W
E37	B	B	B	B	B	B	B	B
E38	R	B	B	B	B	B	B	B
E39	R	R	B	B	B	B	B	B
E40	R	R	R	B	B	B	B	B
E41	R	R	R	R	B	B	B	B
E42	R	R	R	R	R	B	B	B
E43	R	R	R	R	R	R	B	B
E44	R	R	R	R	R	R	R	B
E45	R	R	R	R	R	R	R	R

TABLE IV - EL OCHITO MATING CONTACT

Mating Part Number		Protocols
WHITE-PIN	858-003	Use for gb ethernet and 10gb ethernet protocols
WHITE-SKT	858-004	Use for gb ethernet and 10gb ethernet protocols
BLUE-PIN	858-028	Use for USB 3.0 (90 Ohm)
BLUE-SKT	858-029	Use for USB 3.0 (90 Ohm)
RED-PIN	858-030	Use for all high-bandwidth 100 ohm differential lines
RED-SKT	858-031	Use for all high-bandwidth 100 ohm differential lines

TABLE V - POLARIZING POSITIONS

	N	A	B	C	D	K	L	M	R	U
X	110°	100°	90°	80°	70°	120°	120°	120°	120°	N/A
Y	250°	260°	270°	280°	290°	255°	265°	275°	285°	N/A

TABLE VI

Contact Size	Pc Tail ØM
#23	.020 (0.51) .018 (0.46)
#22	.020 (0.51) .018 (0.46)
#20	.030 (0.76) .028 (0.71)
#16	.040 (1.02) .038 (0.97)
#12	.072 (1.83) .070 (1.78)

TABLE VII - PANEL CUTOUT

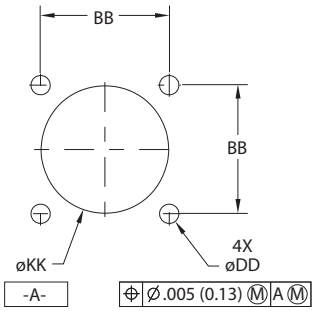

Shell Size	Shell Size Code	ØKK Min	BB Bsc	ØDD
11	B	0.796 (20.22)	0.812 (20.62)	.133 (3.38)/.123 (3.12)
13	C	0.922 (23.42)	0.906 (23.01)	
15	D	1.047 (26.59)	0.969 (24.61)	
17	E	1.219 (30.96)	1.062 (26.97)	
19	F	1.297 (32.94)	1.156 (29.36)	
21	G	1.422 (36.12)	1.250 (31.75)	
23	H	1.547 (39.29)	1.375 (34.93)	.159 (4.04)/.149 (3.78)
25	J	1.672 (42.47)	1.500 (38.10)	.155 (3.94)/.145 (3.68)

MIL-DTL-38999 Series IV Type
234-218 High-speed panel mount receptacles, PC tail

WALL MOUNT RECEPTACLE 234-218 REF: MIL-DTL-38999/40

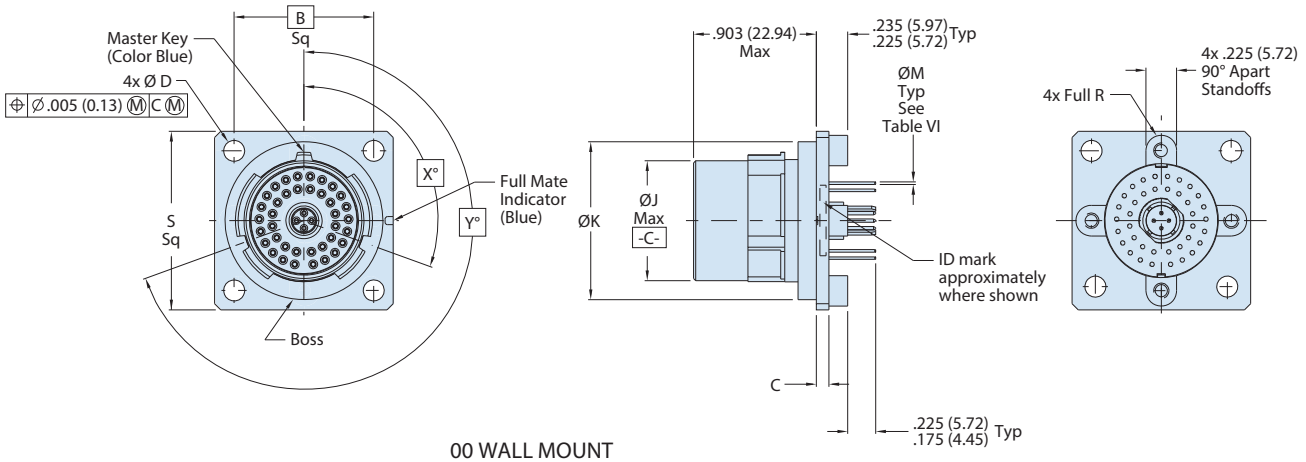

00 WALL MOUNT
THRU HOLE

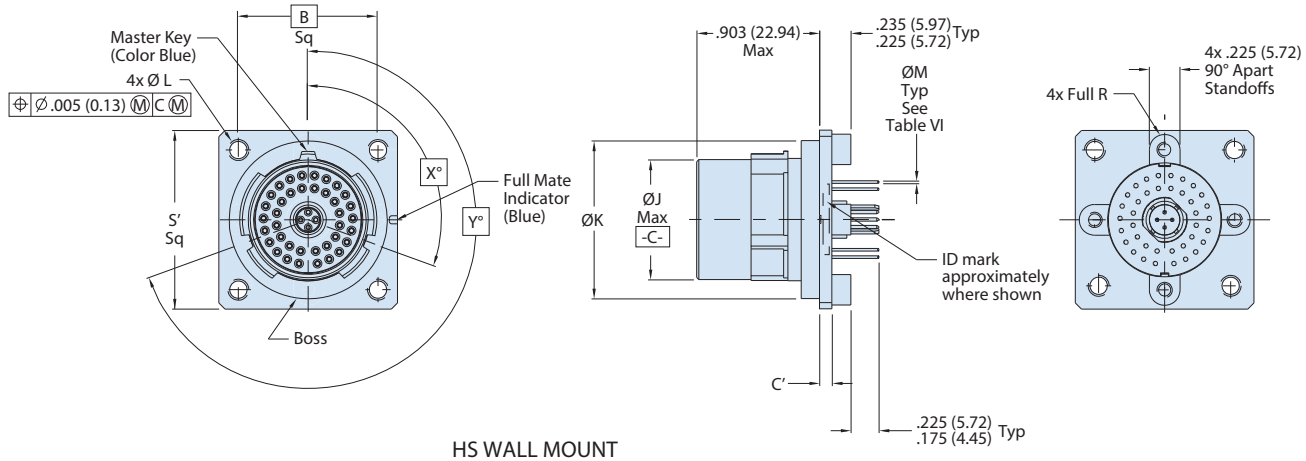

HS WALL MOUNT
STANDARD HELICOIL

Shell Size	Shell Size Code	B Bsc	C	C'	Ø D	Ø J Max	Ø K	L Thread	L' Thread	S	S'	Ø T
11	B	.812 (20.62)	.102 (2.6) .083 (2.1)	.179 (4.5) .140 (3.6)	.138 (3.5) .122 (3.1)	.509 (12.93)	.793 (20.15) .778 (19.76)	.112-40 UNC	M3 X 0.5	1.051 (26.7) 1.008 (25.6)	1.202 (30.5) 1.162 (29.5)	.585 (14.9)
13	C	.906 (23.02)	.102 (2.6) .083 (2.1)		.138 (3.5) .122 (3.1)	.634 (16.10)	.913 (23.35) .904 (22.96)			1.146 (29.1) 1.102 (28.0)	1.296 (32.8) 1.256 (31.9)	.704 (17.9)
15	D	.969 (24.61)	.102 (2.6) .083 (2.1)		.138 (3.5) .122 (3.1)	.759 (19.28)	1.044 (26.52) 1.029 (26.13)			1.240 (31.5) 1.197 (30.4)	1.359 (34.5) 1.319 (33.5)	.861 (21.9)
17	E	1.062 (26.98)	.102 (2.6) .083 (2.1)		.138 (3.5) .122 (3.1)	.885 (22.48)	1.170 (29.72) 1.155 (29.33)			1.335 (33.9) 1.291 (32.8)	1.452 (36.9) 1.412 (35.9)	.980 (24.9)
19	F	1.156 (29.36)	.102 (2.6) .083 (2.1)		.138 (3.5) .122 (3.1)	1.009 (25.63)	1.294 (32.87) 1.279 (32.48)			1.461 (37.1) 1.417 (36.0)	1.546 (39.3) 1.506 (38.3)	1.097 (27.9)
21	G	1.250 (31.76)	.134 (3.4) .114 (2.9)		.138 (3.5) .122 (3.1)	1.134 (28.80)	1.419 (36.05) 1.404 (35.66)			1.583 (40.2) 1.539 (39.1)	1.640 (41.7) 1.600 (40.6)	1.215 (30.9)
23	H	1.375 (34.93)	.134 (3.4) .114 (2.9)	.190 (4.8) .170 (4.3)	.157 (4.0) .142 (3.6)	1.259 (31.98)	1.544 (39.22) 1.529 (38.83)	.138-32 UNC	M4 X 0.7	1.709 (43.4) 1.665 (42.3)	1.765 (44.8) 1.725 (43.8)	1.332 (33.8)
25	J	1.500 (38.10)	.134 (3.4) .114 (2.9)		.157 (4.0) .142 (3.6)	1.384 (35.15)	1.669 (42.40) 1.654 (42.01)			1.835 (46.6) 1.791 (45.5)	1.890 (48.0) 1.850 (47.0)	1.451 (36.9)

© 2025 Glenair, Inc • 1211 Air Way, Glendale, CA 91201 • 818-247-6000 • www.glenair.com • U.S. CAGE code 06324 • SuperNine Series IV
Dimensions in Inches (millimeters) are subject to change without notice.

MIL-DTL-38999 Series IV Type
234-218 High-speed panel mount receptacles, PC tail

WALL MOUNT RECEPTACLE 234-218 REF: MIL-DTL-38999/40

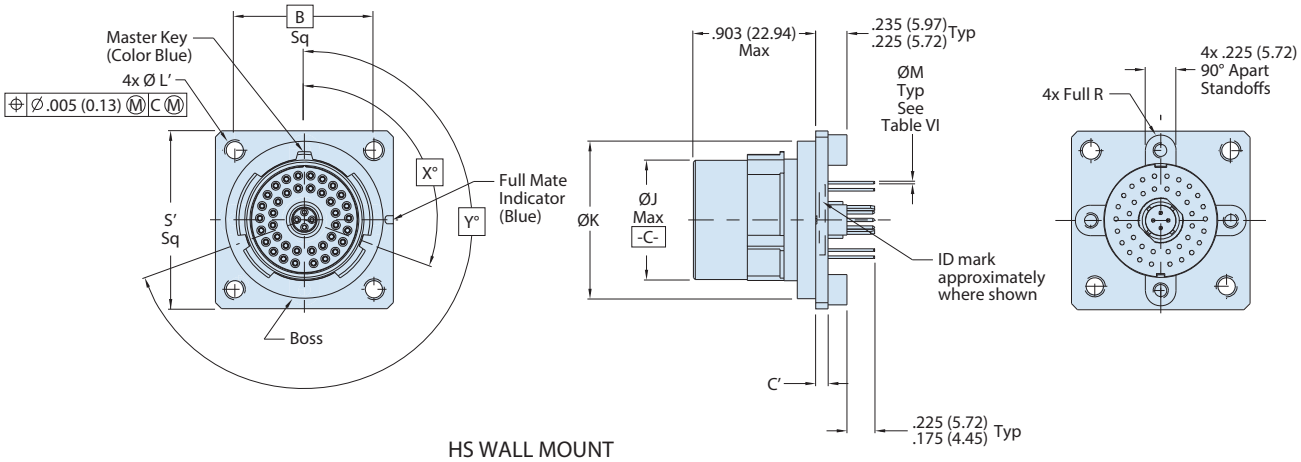

HS WALL MOUNT
METRIC HELICOIL

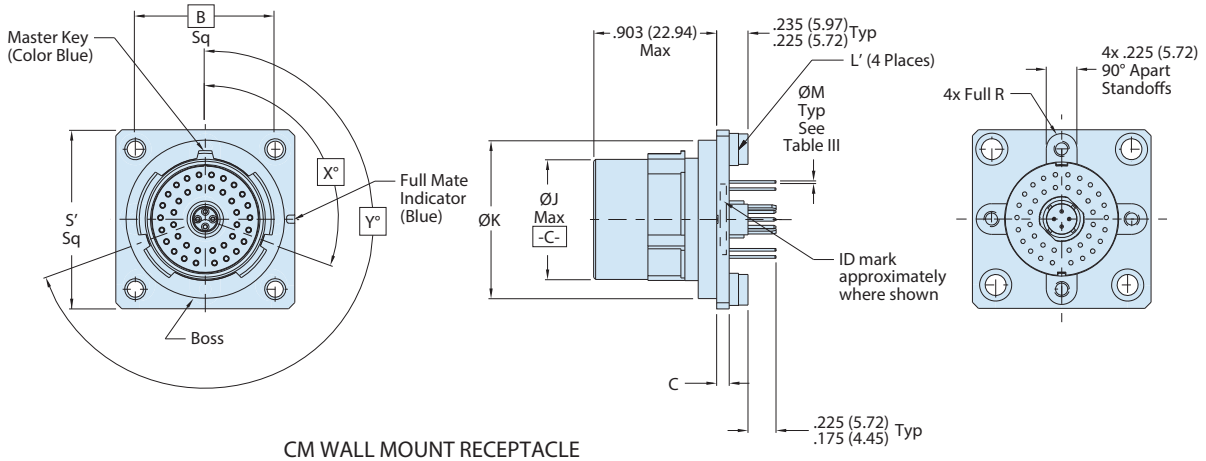

CM WALL MOUNT RECEPTACLE
WITH METRIC CLINCH NUTS
Consult manufacturer

Shell Size	Shell Size Code	B Bsc	C	C'	Ø D	Ø J Max	Ø K	L Thread	L' Thread	S	S'	Ø T
11	B	.812 (20.62)	.102 (2.6) .083 (2.1)		.138 (3.5) .122 (3.1)	.509 (12.93)	.793 (20.15) .778 (19.76)			1.051 (26.7) 1.008 (25.6)	1.202 (30.5) 1.162 (29.5)	.585 (14.9)
13	C	.906 (23.02)	.102 (2.6) .083 (2.1)		.138 (3.5) .122 (3.1)	.634 (16.10)	.913 (23.35) .904 (22.96)			1.146 (29.1) 1.102 (28.0)	1.296 (32.8) 1.256 (31.9)	.704 (17.9)
15	D	.969 (24.61)	.102 (2.6) .083 (2.1)		.138 (3.5) .122 (3.1)	.759 (19.28)	1.044 (26.52) 1.029 (26.13)			1.240 (31.5) 1.197 (30.4)	1.359 (34.5) 1.319 (33.5)	.861 (21.9)
17	E	1.062 (26.98)	.102 (2.6) .083 (2.1)	.179 (4.5) .140 (3.6)	.138 (3.5) .122 (3.1)	.885 (22.48)	1.170 (29.72) 1.155 (29.33)	.112-40 UNC	M3 X 0.5	1.335 (33.9) 1.291 (32.8)	1.452 (36.9) 1.412 (35.9)	.980 (24.9)
19	F	1.156 (29.36)	.102 (2.6) .083 (2.1)		.138 (3.5) .122 (3.1)	1.009 (25.63)	1.294 (32.87) 1.279 (32.48)			1.461 (37.1) 1.417 (36.0)	1.546 (39.3) 1.506 (38.3)	1.097 (27.9)
21	G	1.250 (31.76)	.134 (3.4) .114 (2.9)		.138 (3.5) .122 (3.1)	1.134 (28.80)	1.419 (36.05) 1.404 (35.66)			1.583 (40.2) 1.539 (39.1)	1.640 (41.7) 1.600 (40.6)	1.215 (30.9)
23	H	1.375 (34.93)	.134 (3.4) .114 (2.9)		.157 (4.0) .142 (3.6)	1.259 (31.98)	1.544 (39.22) 1.529 (38.83)			1.709 (43.4) 1.665 (42.3)	1.765 (44.8) 1.725 (43.8)	1.332 (33.8)
25	J	1.500 (38.10)	.134 (3.4) .114 (2.9)	.190 (4.8) .170 (4.3)	.157 (4.0) .142 (3.6)	1.384 (35.15)	1.669 (42.40) 1.654 (42.01)	.138-32 UNC	M4 X 0.7	1.835 (46.6) 1.791 (45.5)	1.890 (48.0) 1.850 (47.0)	1.451 (36.9)

© 2025 Glenair, Inc • 1211 Air Way, Glendale, CA 91201 • 818-247-6000 • www.glenair.com • U.S. CAGE code 06324 • SuperNine Series IV
Dimensions in Inches (millimeters) are subject to change without notice.

MIL-DTL-38999 Series IV Type
234-218 High-speed panel mount receptacles, PC tail

WALL MOUNT RECEPTACLE 234-218 REF: MIL-DTL-38999/40

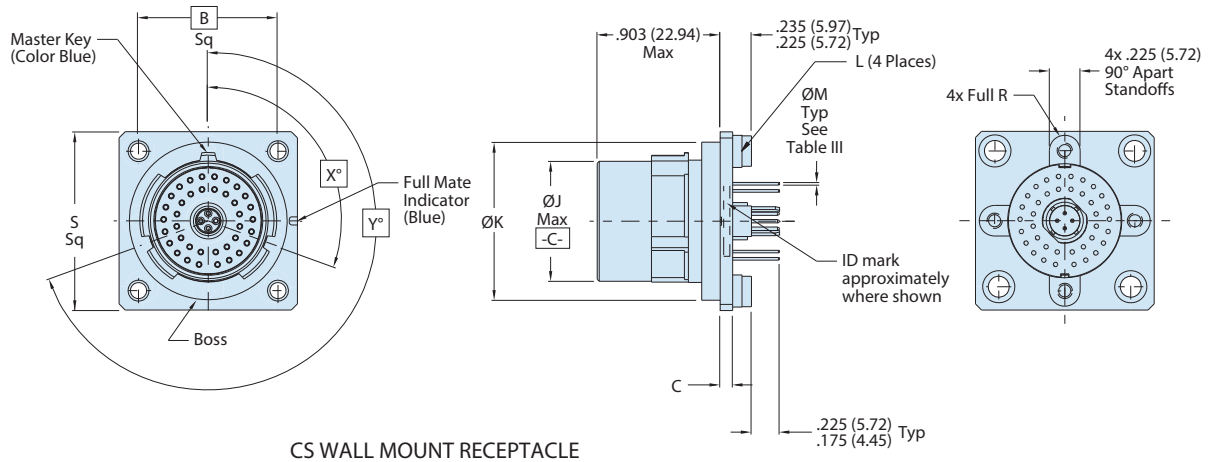

CS WALL MOUNT RECEPTACLE
WITH STANDARD CLINCH NUTS
Consult manufacturer

Shell Size	Shell Size Code	B Bsc	C	C′	Ø D	Ø J Max	Ø K	L Thread	L′ Thread	S	S′	Ø T
11	B	.812 (20.62)	.102 (2.6) .083 (2.1)	.179 (4.5) .140 (3.6)	.138 (3.5) .122 (3.1)	.509 (12.93)	.793 (20.15) .778 (19.76)	.112-40 UNC	M3 X 0.5	1.051 (26.7) 1.008 (25.6)	1.202 (30.5) 1.162 (29.5)	.585 (14.9)
13	C	.906 (23.02)	.102 (2.6) .083 (2.1)		.138 (3.5) .122 (3.1)	.634 (16.10)	.913 (23.35) .904 (22.96)			1.146 (29.1) 1.102 (28.0)	1.296 (32.8) 1.256 (31.9)	.704 (17.9)
15	D	.969 (24.61)	.102 (2.6) .083 (2.1)		.138 (3.5) .122 (3.1)	.759 (19.28)	1.044 (26.52) 1.029 (26.13)			1.240 (31.5) 1.197 (30.4)	1.359 (34.5) 1.319 (33.5)	.861 (21.9)
17	E	1.062 (26.98)	.102 (2.6) .083 (2.1)		.138 (3.5) .122 (3.1)	.885 (22.48)	1.170 (29.72) 1.155 (29.33)			1.335 (33.9) 1.291 (32.8)	1.452 (36.9) 1.412 (35.9)	.980 (24.9)
19	F	1.156 (29.36)	.102 (2.6) .083 (2.1)		.138 (3.5) .122 (3.1)	1.009 (25.63)	1.294 (32.87) 1.279 (32.48)			1.461 (37.1) 1.417 (36.0)	1.546 (39.3) 1.506 (38.3)	1.097 (27.9)
21	G	1.250 (31.76)	.134 (3.4) .114 (2.9)		.138 (3.5) .122 (3.1)	1.134 (28.80)	1.419 (36.05) 1.404 (35.66)			1.583 (40.2) 1.539 (39.1)	1.640 (41.7) 1.600 (40.6)	1.215 (30.9)
23	H	1.375 (34.93)	.134 (3.4) .114 (2.9)	.190 (4.8) .170 (4.3)	.157 (4.0) .142 (3.6)	1.259 (31.98)	1.544 (39.22) 1.529 (38.83)	.138-32 UNC	M4 X 0.7	1.709 (43.4) 1.665 (42.3)	1.765 (44.8) 1.725 (43.8)	1.332 (33.8)
25	J	1.500 (38.10)	.134 (3.4) .114 (2.9)		.157 (4.0) .142 (3.6)	1.384 (35.15)	1.669 (42.40) 1.654 (42.01)			1.835 (46.6) 1.791 (45.5)	1.890 (48.0) 1.850 (47.0)	1.451 (36.9)

© 2025 Glenair, Inc • 1211 Air Way, Glendale, CA 91201 • 818-247-6000 • www.glenair.com • U.S. CAGE code 06324 • SuperNine Series IV
Dimensions in Inches (millimeters) are subject to change without notice.

MIL-DTL-38999 Series IV Type
234-218 High-speed panel mount receptacles, PC tail insert arrangements

FIGURE 1 - INSERT ARRANGEMENTS

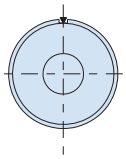

Arrangement 9XG5
(Available only with
ground plane option)

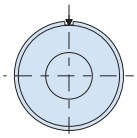

Arrangement 11x-1
1x Size 8

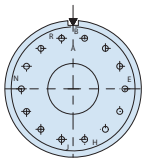

Arrangement 13x-14
1x Size 8
14x Size 23

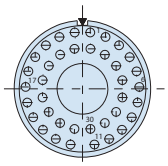

Arrangement 17x-2
1x Size 8
38x Size 22

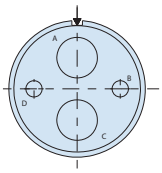

Arrangement 17x-22
(IAW prEN 3645-001)
2x Size 8
2x Size 12

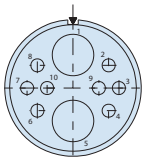

Arrangement 17x-60
2x Size 8
8x Size 22

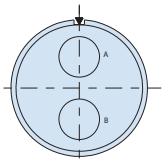

Arrangement 17x-75
(IAW prEN 3645-001)
2x Size 8

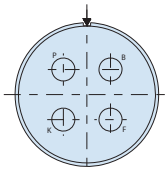

Arrangement 19x-4
4x Size 8

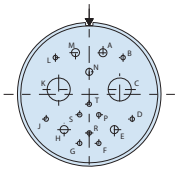

Arrangement 19x-17
10x Size 22d
1x Size 20
4x Size 16
2x Size 8

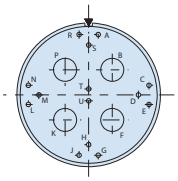

Arrangement 19x-18
14x Size 22d
4x Size 8

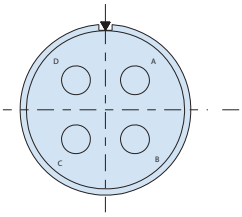

Arrangement 21x-75
4x Size 8

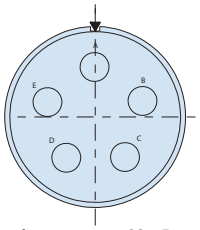

Arrangement 23x-5
(IAW prEN 3645-001)

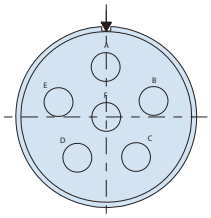

Arrangement 23x-6
(IAW prEN 3645-001)
5x Size 8

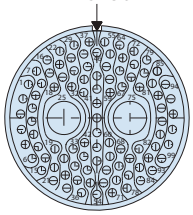

Arrangement 25x-7
97x Size 22
2x Size 8
6x Size 8

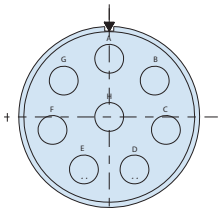

Arrangement 25x-8
8x Size 8

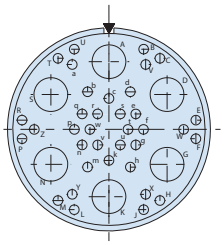

Arrangement 25x-17
36x Size 22

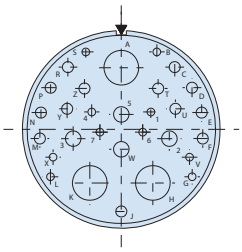

Arrangement 25x-20
(IAW prEN 3645-001)
10x Size 20
13x Size 16
4x Size 12
3x Size 8

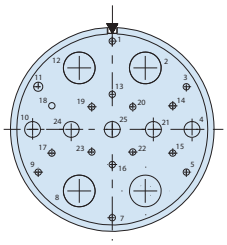

Arrangement 25x-26
(IAW prEN 3645-001)
16x Size 20, 5x Size 12
4x Size 8

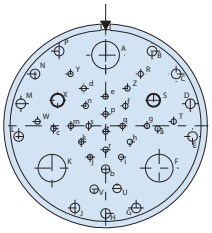

Arrangement 25x-41
22x Size 22d, 3x Size 20
11x Size 16, 2x Size 12
3x Size 8

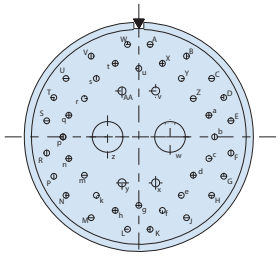

Arrangement 25x-46
40x Size 20
4x Size 16
2x Size 8

Figure 1
Insert arrangements, mating face of pin insert shown.
Replace X with C, D, E, Q or T
(See Table VI)

FIGURE 2 - CONTACT INNER PIN ORIENTATION

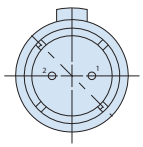

Diferental
Twinax

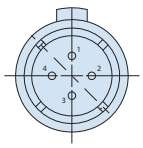

Quadrax

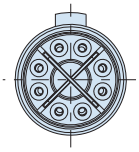

El Ochito

MIL-DTL-38999 Series IV Type
234-218 High-speed panel mount receptacles, PC tail contact options

COAX CONTACTS

COAX CONTACTS

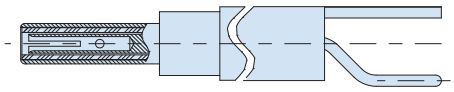

Size #16 Coax Contact, Pin, PC Tail Detail
Interface per M39029/76
Note: Max usable frequency of 700 Mhz

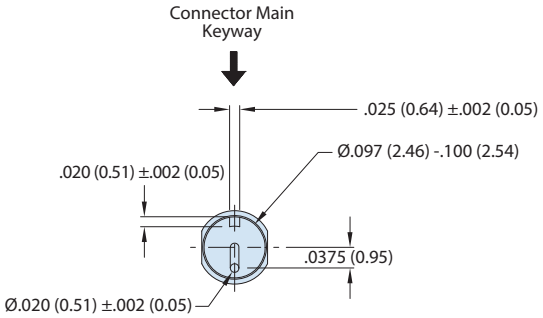

Contact rear view
and interface requirements

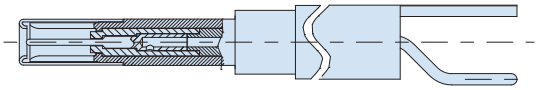

Size #16 Coax Contact, Socket, PC Tail Detail
Interface per M39029/77
Note: Max usable frequency of 700 Mhz

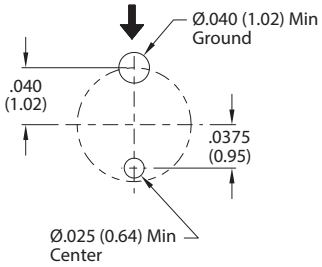

Recommended PCB Footprint

NOTES

1. Material/Finish
   - Shell - See Table I
   - Contacts - Copper Alloy / Gold Plated
   - Insulators - High Grade Rigid Dielectric. for common ground option - Al Alloy/ Mfg Option
   - Seals - Fluorosilicone Blend.
   - Potting - Epoxy.
2. Glenair's 234-218 receptacle connector is designed to meet or exceed the applicable mechanical, dimensional, electrical, and environmental requirements of MIL-DTL-38999, D38999/20, and MIL-STD-1560 except as shown and/or noted. Receptacle mates with any QPL manufacturer's MIL-DTL-38999, Series III plug connector, D38999/26, having the same shell size, insert arrangement, polarization and mating contact.
3. Glenair's 233-218 receptacle connector should be mated to Glenair's 233-217 plug with appropriate contacts to optimize performance.
4. Insert arrangement is in accordance with MIL-STD-1560 and figure 1. Contact manufacturer for additional arrangement options.
5. Insert arrangement is shown for reference only. Pin interface shown.
6. See figure 2 for reference orientation of the inner pins relative to connector main keyway.
7. Ground plane option only available for insert arrangements where all contacts are shielded type.
8. Coax contact mating interfaces shall be in accordance with the following:
   - Size #16 Per M39029/76 & /77
   - Size #12 Per M39029/102 & 103
   - Size #8, 50 Ohm Per M39029/59 & 60
   - Size #8, 75 Ohm Per 852-056 & -057
9. El Ochito mating contact shall be in accordance with Table III. El Ochito color type configuration positon shall be per Table III.
10. For optimal performance, see Glenair application note AN0002.

© 2025 Glenair, Inc • 1211 Air Way, Glendale, CA 91201 • 818-247-6000 • www.glenair.com • U.S. CAGE code 06324 • SuperNine Series IV
Dimensions in Inches (millimeters) are subject to change without notice.

MIL-DTL-38999 Series IV Type
234-218 High-speed panel mount receptacles, PC tail contact options

COAX CONTACTS

COAX CONTACTS

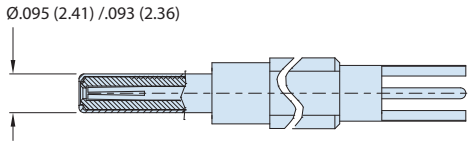

Size #12 Coax Contact Pin, PC Tail Detail
Interface per M39029/102

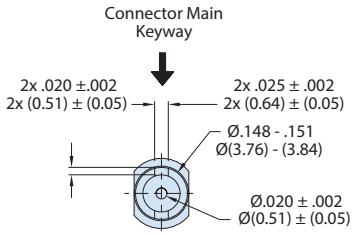

50 Ohm contact rear view
and interface requirements

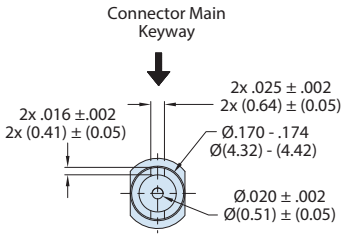

75 Ohm contact rear view
and interface requirements

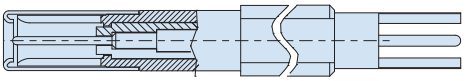

Size #12 Coax Contact Socket, PC Tail Detail
Interface per M39029/103

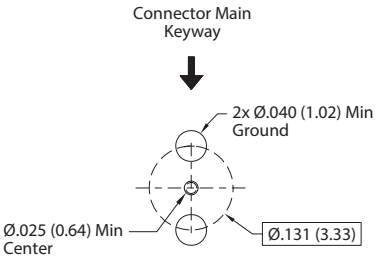

50 Ohm Contact
Recommended PCB Footprint

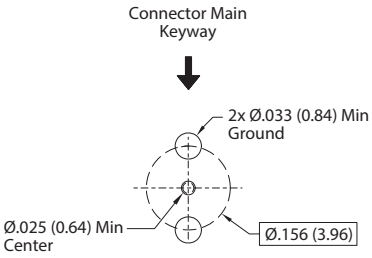

75 Ohm Contact
Recommended PCB Footprint

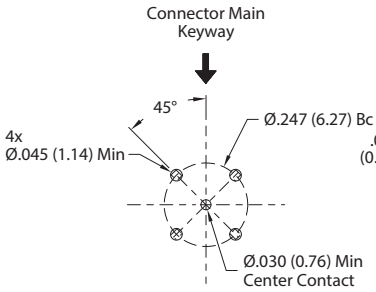

Recommended
Co-ax PCB Layout

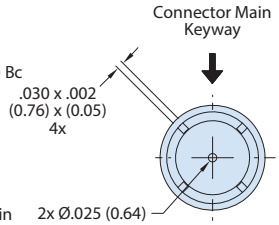

Rear View

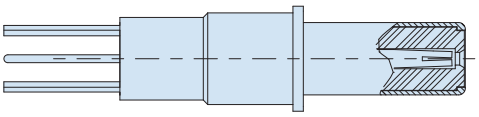

SIZE #8 CO-AX PIN, PC TAIL DETAIL
C = Interface Per M39029/60 (50 Ohm)
C1 = Interface Per 852-056 (75 Ohm)

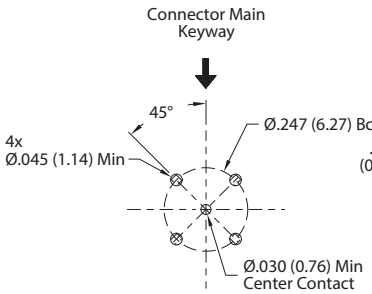

Recommended
Co-ax PCB Layout

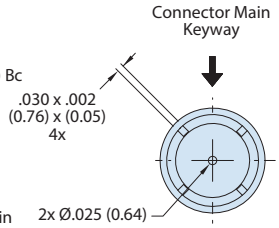

Rear View

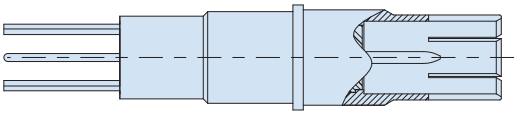

SIZE #8 CO-AX SOCKET, PC TAIL DETAIL
C = Interface Per M39029/59 (50 Ohm)
C1 = Interface Per 852-057 (75 Ohm)

© 2025 Glenair, Inc • 1211 Air Way, Glendale, CA 91201 • 818-247-6000 • www.glenair.com • U.S. CAGE code 06324 • SuperNine Series IV
Dimensions in Inches (millimeters) are subject to change without notice.

MIL-DTL-38999 Series IV Type
234-218 High-speed panel mount receptacles, PC tail contact options

TWINAX CONTACTS

DIFFERENTIAL TWINAX CONTACT DETAILS

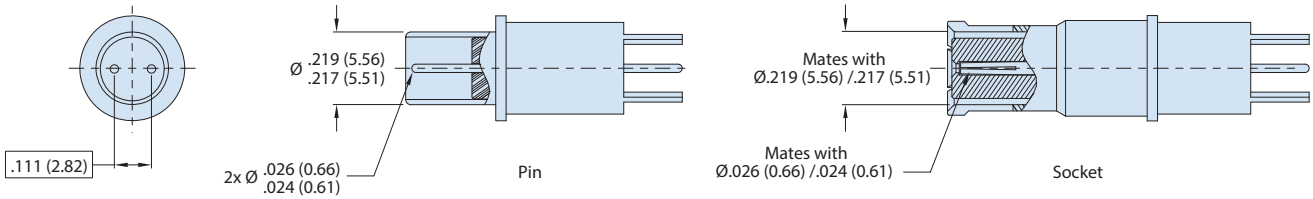

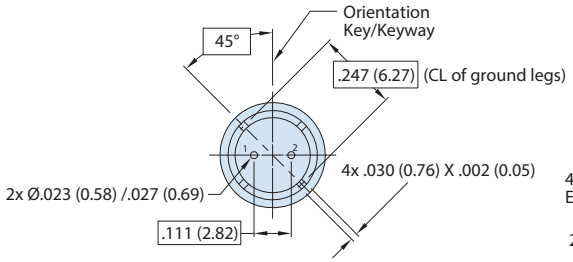

Rear view of differential twinax pin contact (rear) shown. Pin no's are for ref only and shall not be marked.

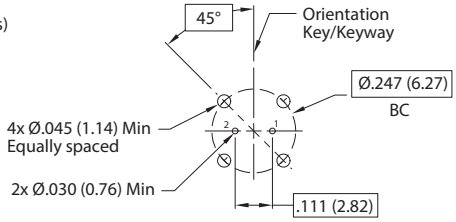

Recommended PC Board Layout
(Pin ID Shown)

© 2025 Glenair, Inc • 1211 Air Way, Glendale, CA 91201 • 818-247-6000 • www.glenair.com • U.S. CAGE code 06324 • SuperNine Series IV
Dimensions in Inches (millimeters) are subject to change without notice.

MIL-DTL-38999 Series IV Type
234-218 High-speed panel mount receptacles, PC tail contact options

EL OCHITO CONTACTS

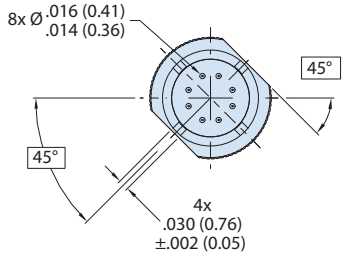

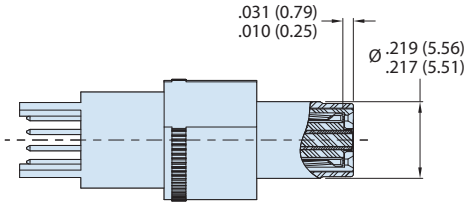

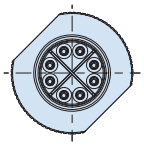

Size #8 El Ochito Pin, Pc Tail Detail
White Insert - For Ethernet Applications

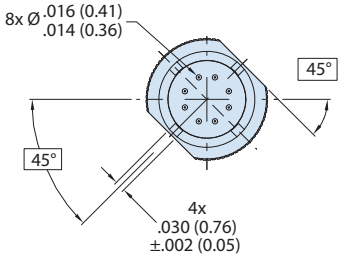

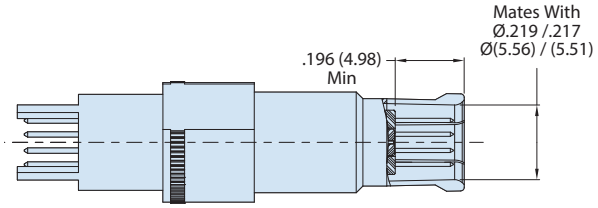

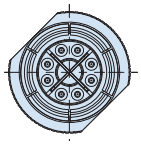

Size #8 El Ochito Socket, PC Tail Detail
White Insert - For Ethernet Applications

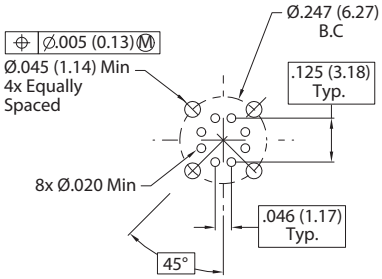

Recommended PC Board Layout
(See Detail A for pin assignment)
For optimal performance, see
Glenair application note AN0002

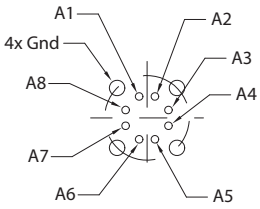

PC Tail Pin Assignment
(For Ochito Pin Contact)

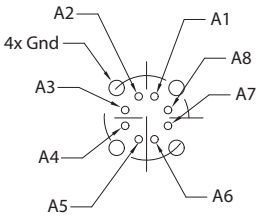

PC Tail Pin Assignment
(For Ochito Skt Contact)

DETAIL A (TYP)

MIL-DTL-38999 Series IV Type
234-218 High-speed panel mount receptacles, PC tail contact options

QUADRAX CONTACTS

QUADRAX CONTACT DETAILS

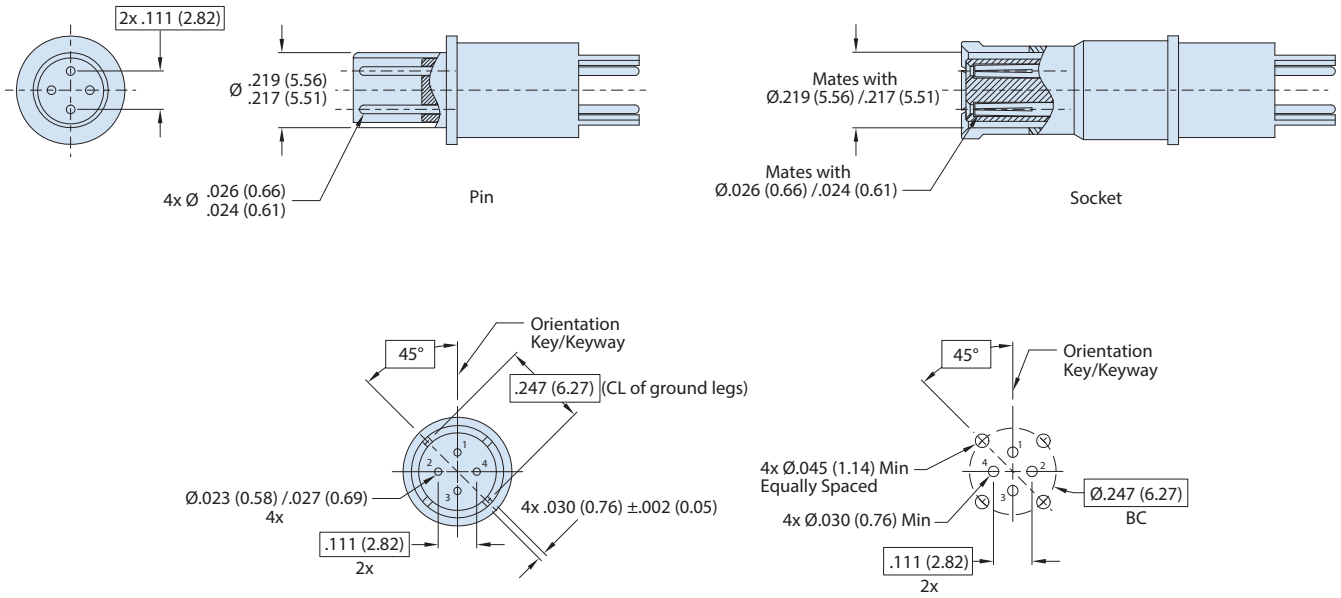

Rear view of differential quadrax pin contact (rear) shown. Pin no's are for ref only and shall not be marked. (Ref: differential pairs: 1 & 3; 2 & 4)

Recommended PC Board Layout (Pin ID shown)

© 2025 Glenair, Inc • 1211 Air Way, Glendale, CA 91201 • 818-247-6000 • www.glenair.com • U.S. CAGE code 06324 • SuperNine Series IV
Dimensions in Inches (millimeters) are subject to change without notice.

MIL-DTL-38999 Series IV Type
234-218 High-speed panel mount receptacles, PC tail contact options

TRIAX / CONCENTRIC TWINAX CONTACTS

TRIAX / CONCENTRIC TWINAX PIN

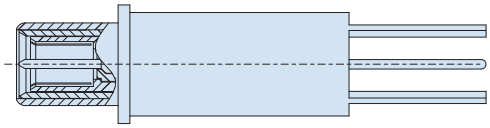

Size #8 Concentric Twinax Pin, Pc Tail Detail
Interface per M39029/90 and/113

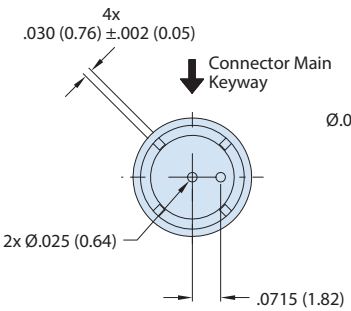

Rear View

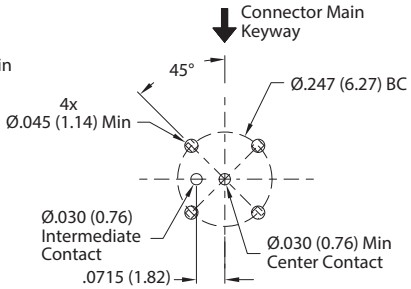

Recommended
Twinax PCB Layout

TRIAX / CONCENTRIC TWINAX SOCKET

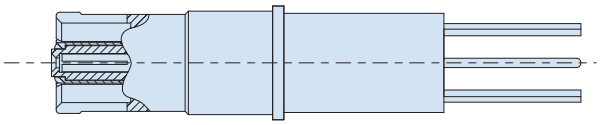

Size #8 Concentric Twinax Socket, PC Tail Detail
Interface per M39029/91 and/114

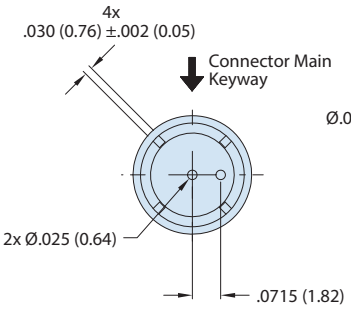

Rear View

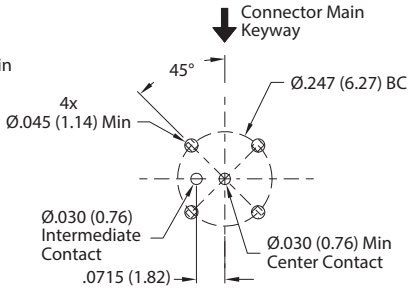

Recommended
Twinax PCB Layout

SuperNine® Series IV Environmental

MIL-DTL-38999 Series IV Type
250-104 Shorting connectors, plug and receptacles

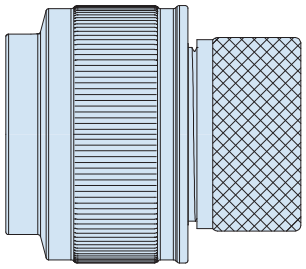

HOW TO ORDER							
Sample Part Number	**250-104**	**-G6**	**NF**	**17**	**-35**	**P**	**N**

Basic Part Number	**250-104** Plug and receptacle connector, shorting
Connector Style	**G6** = Plug Connector **D0** = Wall-Mount Thru Hole **07** = Receptacle, Jam Nut
Material / Finish	See Table I
Shell Size	**11**, **13**, **15**, **17**, **19**, **21**, **23**, **25**
Insert Arrangement	MIL-STD-1560
Insert Designator	**P** = Pin Contacts **S** = Socket Contacts
Polarization	**A**, **B**, **C**, **D**, **K**, **L**, **M**, **R**, **N** = Normal, **U** = Universal

"BETTER-THAN-QPL" FEATURES AND BENEFITS

- Secure breech-lock mating connector meets D38999 shock and vibe
- Improved plug ground fingers deliver outstanding EMI performance—equal to D38999 Series III
- Glenair Signature Tin Zinc finish class is RoHS compliant and cadmium compatible
- Precision-machined key/keyway polarization for reliable mismating protection
- Scoop-proof design prevents pin damage and short circuits
- Fully tooled for all MIL-STD-1560 insert arrangements
- Contact options include size #22D, #20, #16, and #12 (see High-Speed series for Size #8)
- 500 mating cycles exceeds MIL-DTL-38999 specification

TABLE I - MATERIAL/FINISH

Equiv Class	Sym	Material	Finish
W	**NF**	Aluminum Alloy	Cad/O.D. over Electroless Nickel
G*	**MA****		Electroless Nickel, Matte
T*	**MT**		Nickel-PTFE
F	**ME**		Electroless Nickel
AA	**MN**		MegaNickel
V	**TZ**		Tin-Zinc
Z*	**ZR**		Zinc Ni, Black (Tri-Valent CR)
K*	**Z1**	Stainless Steel	Passivate
L*	**ZL**		Electrodeposited Nickel

* = Glenair Equivalent Only

** = Connectors for space applications must be ordered with "MA" finish and mod code "-186T" to conform to the thermal vacuum outgassing requirements of class G.

TABLE II - POLARIZING POSITIONS

	N	A	B	C	D	K	L	M	R	U
X	110°	100°	90°	80°	70°	120°	120°	120°	120°	N/A
Y	250°	260°	270°	280°	290°	255°	265°	275°	285°	N/A

© 2025 Glenair, Inc • 1211 Air Way, Glendale, CA 91201 • 818-247-6000 • www.glenair.com • U.S. CAGE code 06324 • SuperNine Series IV
Dimensions in Inches (millimeters) are subject to change without notice.

MIL-DTL-38999 Series IV Type
250-104 Plug and receptacle connector, shorting

TABLE III - PLUG REF: MIL-DTL-38999/46 OR 47

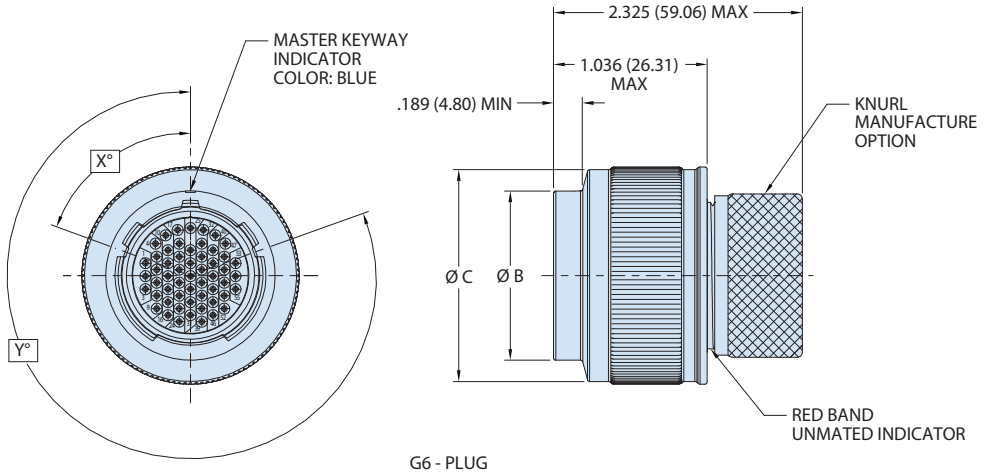

G6 - PLUG
(REF: MIL-DTL-28999/46)

Shell Size	Shell Size Code	ØB Max	ØC Max
11	B	.776 (19.7)	1.047 (26.6)
13	C	.902 (22.9)	1.220 (31.0)
15	D	1.039 (26.4)	1.346 (34.2)
17	E	1.150 (29.2)	1.472 (37.4)
19	F	1.276 (32.4)	1.583 (40.2)
21	G	1.402 (35.6)	1.705 (43.3)
23	H	1.528 (38.8)	1.831 (46.5)
25	J	1.650 (41.9)	1.957 (49.7)

NOTES

1. Material/finish:
   - Shell, barrel, coupling nut, jam nut - see Table I
   - Insulator - high grade rigid dielectric / N.A.
   - Seals, O-ring - fluorosilicone blend/ N.A
   - Contact - copper alloy
2. Glenair environmental connectors are designed to mate with any QPL manufacturer's MIL-DTL-38999, Series IV mating plug or receptacle having the same shell size, insert arrangment, and polarization.
3. Insert arrangement is in accordance with MIL-STD-1560.
4. Insert arrangement is shown for reference only. Pin interface shown.
5. Alternate polarization 'U' (universal) is a non-standard MIL-SPEC option which allows for mating to any QPL manufacturer's MIL-DTL-38999, Series III connector having the same shell size, insert arrangement, and mating contact size. Universal connectors are intended for use in testing facilities only and should be highly evaluated before consideration in another environment.
6. All contacts are shorted to each other and to the shell. The maximum resistance as measured from any contact to the shell shall be 10 miliohms.
7. Connector temperature range: -55°C to 175°C. Contact manufacturer for additional options.

MIL-DTL-38999 Series IV Type
250-104 Plug and receptacle connector, shorting

TABLE IV - JAM NUT RECEPTACLE (REF: MIL-DTL-38999/44)

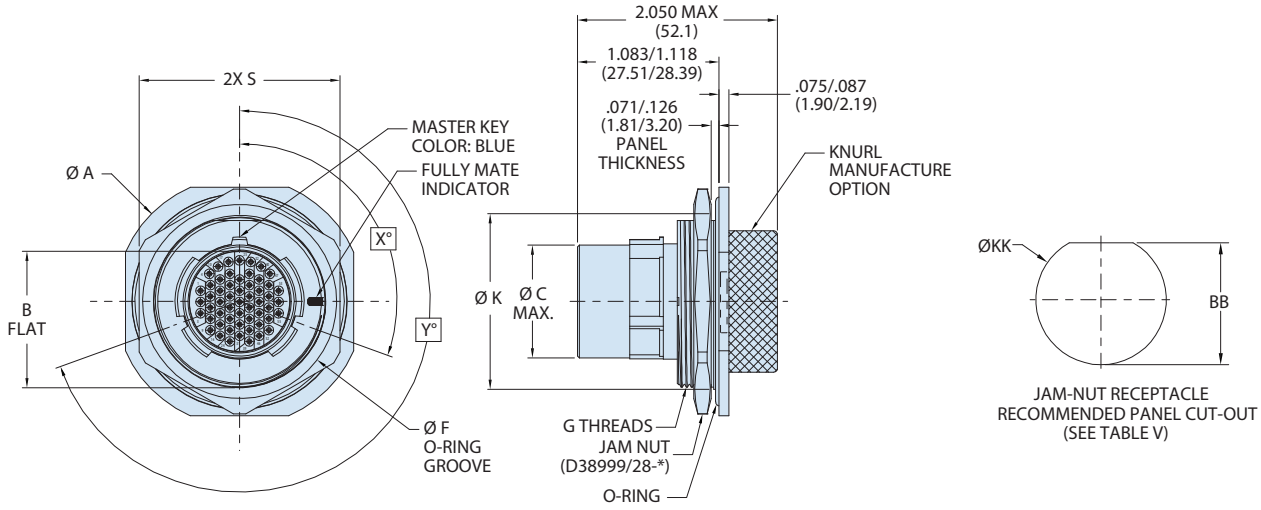

07 - JAM NUT RECEPTACLE
(REF: MIL-DTL-38999/44)

Shell Size	Shell Size Code	ØA	B (Flat)	ØC Max	ØF	G Thread	ØJ	ØK	S	O-Ring P/N
11	B	1.520 (38.6) 1.480 (37.6)	.942 (23.93) .935 (23.74)	.509 (12.93)	1.096 (27.84) 1.085 (27.55)	M25 X 1.0-6g 0.100R	.804 (20.42) .794 (20.17)	1.000 (25.40) .990 (25.15)	1.394 (35.4) 1.354 (34.4)	AS3582-024
13	C	1.642 (41.7) 1.602 (40.7)	1.066 (27.08) 1.059 (26.89)	.634 (16.10)	1.221 (31.02) 1.210 (30.73)	M28 X 1.0-6g 0.100R	.928 (23.57) .918 (23.32)	1.125 (28.58) 1.115 (28.33)	1.520 (38.6) 1.480 (37.6)	AS3582-026
15	D	1.768 (44.9) 1.728 (43.9)	1.191 (30.26) 1.184 (30.07)	.759 (19.28)	1.346 (34.19) 1.335 (33.90)	M31 X 1.0-6g 0.100R	1.046 (26.56) 1.036 (26.31)	1.250 (31.75) 1.240 (31.50)	1.642 (41.7) 1.602 (40.7)	AS3582-028
17	E	1.957 (49.7) 1.917 (48.7)	1.321 (33.56) 1.314 (33.37)	.885 (22.48)	1.483 (37.67) 1.472 (37.38)	M34 X 1.0-6g 0.100R	1.182 (30.02) 1.172 (29.77)	1.375 (34.92) 1.365 (34.67)	1.799 (45.7) 1.760 (44.7)	AS3582-029
19	F	2.035 (51.7) 1.996 (50.7)	1.441 (36.61) 1.434 (36.42)	1.009 (25.63)	1.608 (40.85) 1.597 (40.56)	M38 X 1.0-6g 0.100R	1.296 (32.91) 1.286 (32.66)	1.500 (38.10) 1.490 (37.85)	1.909 (48.5) 1.870 (47.5)	AS3582-030
21	G	2.157 (54.8) 2.118 (53.8)	1.566 (39.78) 1.559 (39.59)	1.134 (28.80)	1.733 (44.02) 1.722 (43.73)	M41 X 1.0-6g 0.100R	1.422 (36.11) 1.412 (35.86)	1.625 (41.28) 1.615 (41.03)	2.035 (51.7) 1.996 (50.7)	AS3582-031
23	H	2.283 (58.0) 2.244 (57.0)	1.691 (42.96) 1.684 (42.77)	1.259 (31.98)	1.858 (47.20) 1.847 (46.91)	M44 X 1.0-6g 0.100R	1.546 (39.26) 1.536 (39.01)	1.750 (44.45) 1.740 (44.20)	2.157 (54.8) 2.118 (53.8)	AS3582-032
25	J	2.409 (61.2) 2.370 (60.2)	1.816 (46.13) 1.809 (45.94)	1.384 (35.15)	1.983 (50.37) 1.972 (50.08)	M47 X 1.0-6g 0.100R	1.672 (42.46) 1.662 (42.21)	1.875 (47.63) 1.865 (47.38)	2.283 (58.0) 2.244 (57.0)	AS3582-033

TABLE V

Shell Size	Shell Size Code	ØKK	BB
11	B	1.020 / 1.010	.955 / .945
13	C	1.145 / 1.135	1.085 / 1.075
15	D	1.270 / 1.260	1.210 / 1.200
17	E	1.395 / 1.385	1.335 / 1.325
19	F	1.520 / 1.510	1.460 / 1.450
21	G	1.645 / 1.635	1.585 / 1.575
23	H	1.770 / 1.760	1.710 / 1.700
25	J	1.895 / 1.885	1.835 / 1.825

© 2025 Glenair, Inc • 1211 Air Way, Glendale, CA 91201 • 818-247-6000 • www.glenair.com • U.S. CAGE code 06324 • SuperNine Series IV
Dimensions in Inches (millimeters) are subject to change without notice.

MIL-DTL-38999 Series IV Type
250-104 Plug and receptacle connector, shorting

TABLE VI - WALL MOUNT RECEPTACLE REF: MIL-DTL-38999/40

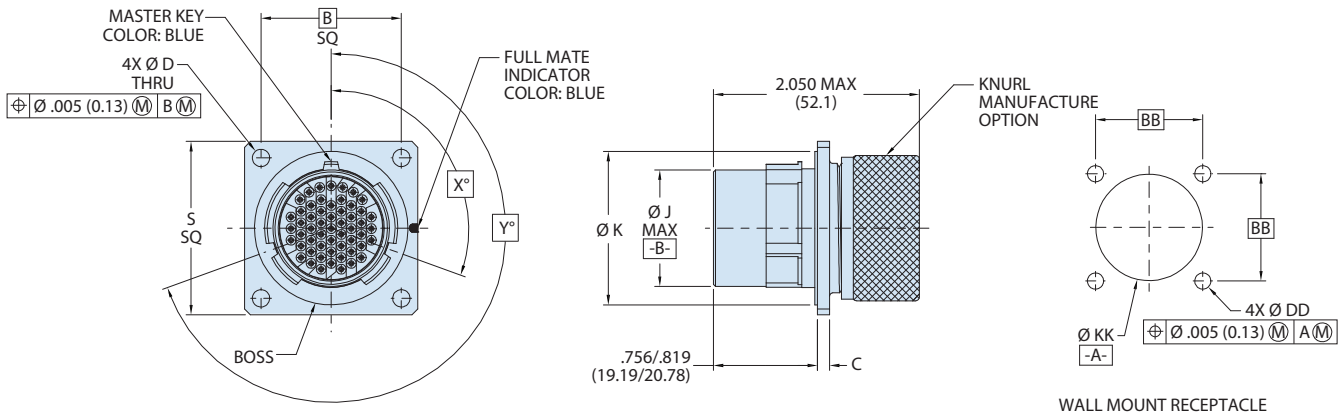

DO - WALL MOUNT RECEPTACLE
(REF: MIL-DTL-38999/40)

WALL MOUNT RECEPTACLE
RECOMMENDED PANEL CUTOUT
.125 MAX PANEL THICKNESS
BACK PANEL MOUNT
(SEE TABLE VII)

Shell Size	Shell Size Code	B Bsc	C	ØD	ØJ Max	ØK	S
11	B	.812 (20.62)	.102 (2.6) .083 (2.1)	.138 (3.5) .122 (3.1)	.509 (12.93)	.793 (20.15) .778 (19.76)	1.051 (26.7) 1.008 (25.6)
13	C	.906 (23.02)	.102 (2.6) .083 (2.1)	.138 (3.5) .122 (3.1)	.634 (16.10)	.913 (23.35) .904 (22.96)	1.146 (29.1) 1.102 (28.0)
15	D	.969 (24.61)	.102 (2.6) .083 (2.1)	.138 (3.5) .122 (3.1)	.759 (19.28)	1.044 (26.52) 1.029 (26.13)	1.240 (31.5) 1.197 (30.4)
17	E	1.062 (26.98)	.102 (2.6) .083 (2.1)	.138 (3.5) .122 (3.1)	.885 (22.48)	1.170 (29.72) 1.155 (29.33)	1.335 (33.9) 1.291 (32.8)
19	F	1.156 (29.36)	.102 (2.6) .083 (2.1)	.138 (3.5) .122 (3.1)	1.009 (25.63)	1.294 (32.87) 1.279 (32.48)	1.461 (37.1) 1.417 (36.0)
21	G	1.250 (31.76)	.134 (3.4) .114 (2.9)	.138 (3.5) .122 (3.1)	1.134 (28.80)	1.419 (36.05) 1.404 (35.66)	1.583 (40.2) 1.539 (39.1)
23	H	1.375 (34.93)	.134 (3.4) .114 (2.9)	.157 (4.0) .142 (3.6)	1.259 (31.98)	1.544 (39.22) 1.529 (38.83)	1.709 (43.4) 1.665 (42.3)
25	J	1.500 (38.10)	.134 (3.4) .114 (2.9)	.157 (4.0) .142 (3.6)	1.384 (35.15)	1.669 (42.40) 1.654 (42.01)	1.835 (46.6) 1.791 (45.5)

TABLE VII

Shell Size	Shell Size Code	ØKK Min	BB Bsc	ØDD
11	B	0.796	0.812	.133/.123
13	C	0.922	0.906	
15	D	1.047	0.969	
17	E	1.219	1.062	
19	F	1.297	1.156	
21	G	1.422	1.250	
23	H	1.547	1.375	.159/.149
25	J	1.672	1.500	.155/.145

© 2025 Glenair, Inc • 1211 Air Way, Glendale, CA 91201 • 818-247-6000 • www.glenair.com • U.S. CAGE code 06324 • SuperNine Series IV
Dimensions in Inches (millimeters) are subject to change without notice.

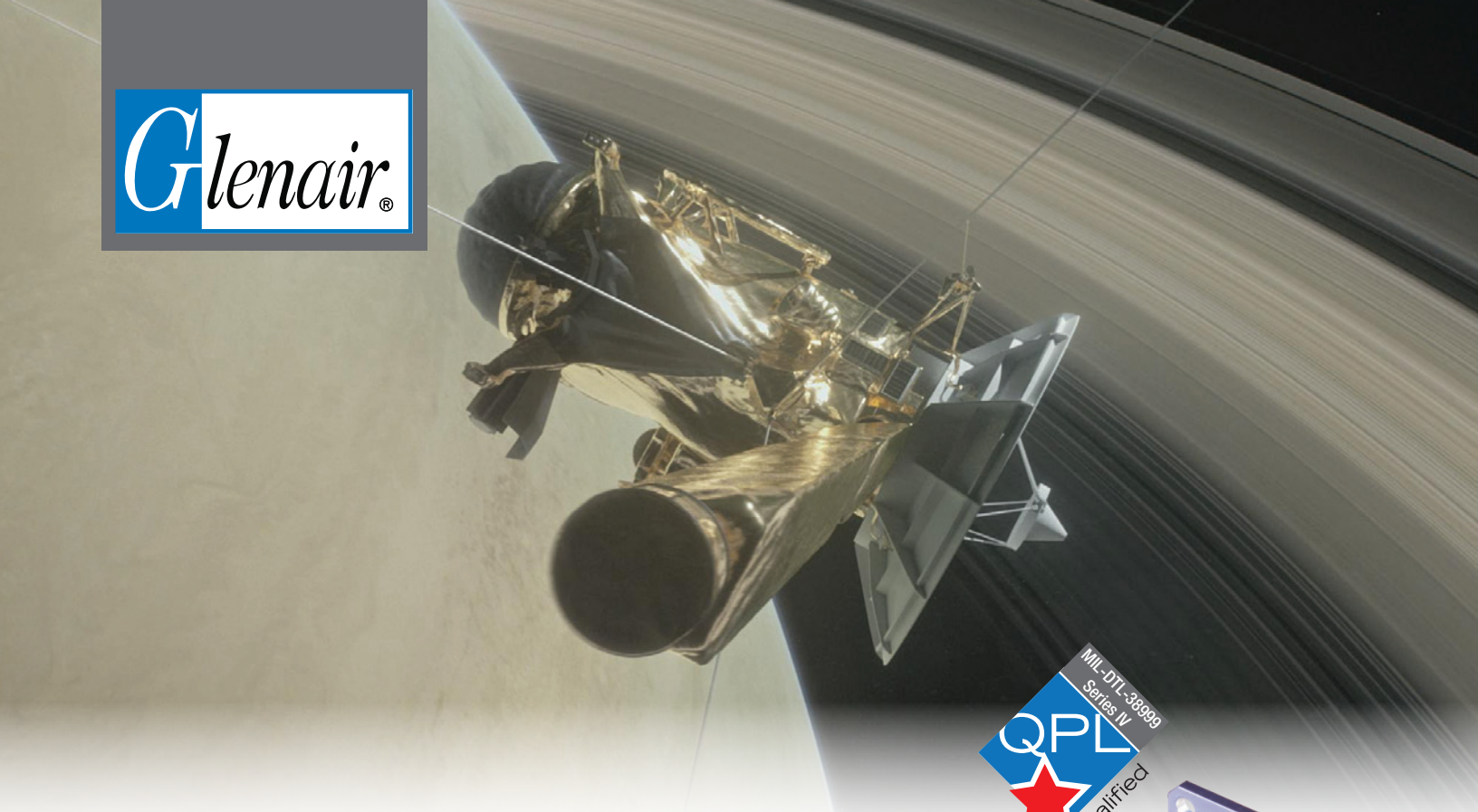

QPL AND COTS EQUIVALENT

MIL-DTL-38999 Series IV Hermetic

The industry standard mil/aero connector backed with Glenair service and availability

Hermetic-class DLA certified MIL-DTL-38999 Series IV connectors from Glenair provide hermetically sealed breech lock connectors for high shock and vibration applications. Breech-lock systems provide robust engagement augmented by an internal mechanical thread to ensure connectors remain mated. Glenair Series IV hermetics maintain seal integrity and prevent ingress of chemical substances or fluids in mission-critical vacuum environments where air or gas impurities can result in corrosion, dielectric breakdown, and loss of insulation resistance between conductors. Typical applications include medical, geophysical, military aerospace and other industrial applications. Marked with D38999 or Glenair COTS part numbering, these hermetic class receptacles are available for panel mount, jam-nut, solder mount and weld mount shell styles. All standard material and finish classes are supported including Y (CRES, passivated) and N (CRES, electrodeposited nickel). Contact arrangements per MIL-STD-1560 and both normal and alternate polarizations are fully supported. Best of all, defense and commercial aerospace customers, as well as land and marine engineers and procurement specialists may now specify these mission-critical interconnects directly from Glenair—the recognized service, support, and availability leader for the interconnect industry.

DLA-QPL MIL-DTL-38999 SERIES III AVAILABLE FROM GLENAIR

- **Qualified hermetic jam-nut, weld, solder and panel mount receptacles**
- **All 1560 crimp-contact insert arrangements fully supported**
- **N and Y plating classes, plus Glenair COTS equivalents**
- **100% made in America, no foreign-sourced materials, component parts, or assembly labor employed**

Glenair: Made in America since 1956

© 2025 Glenair, Inc • 1211 Air Way, Glendale, CA 91201 • 818-247-6000 • www.glenair.com • U.S. CAGE code 06324 • SuperNine Series IV
Dimensions in Inches (millimeters) are subject to change without notice.

SuperNine® Series IV Hermetic

Industry standard, hermetic triple-start mating, MIL qualified connectors

MECHANICAL, HERMETIC, AND ELECTRICAL PERFORMANCE

MIL-DTL-38999 Series IV (Glenair Series 234-100) offers outstanding interconnect performance for mission-critical military and commercial applications.

- **Breech-lock, self locking connectors available with pin/socket, solder cup or eyelet contacts**
- **Electromagnetic compatibility (EMC):** metal-to-metal coupling, plug grounding fingers, and conductive shell finishes deliver excellent shielding performance up to 45 dB at 10 GHz
- **Contact protection:** scoop-proof design prevents inadvertent damage to pin contacts during mating
- **Hermetic sealing: 10^{-7} cc/second maximum helium leak rate**
- **Corrosion resistance:** connector shells are made from corrosion resistant steel and are offered with passivated or electrodeposited nickel finish
- **Mating:** breech lock interface provides fast mating with excellent high shock and vibration tolerance to demating
- **Supported contacts:** from size #22D signal to #12 signal in solder cup, feedthru, and eyelet
- **Commercial equivalent:** Glenair COTS equivalent connectors deliver mil-spec performance with material/finish options not available in QPL parts

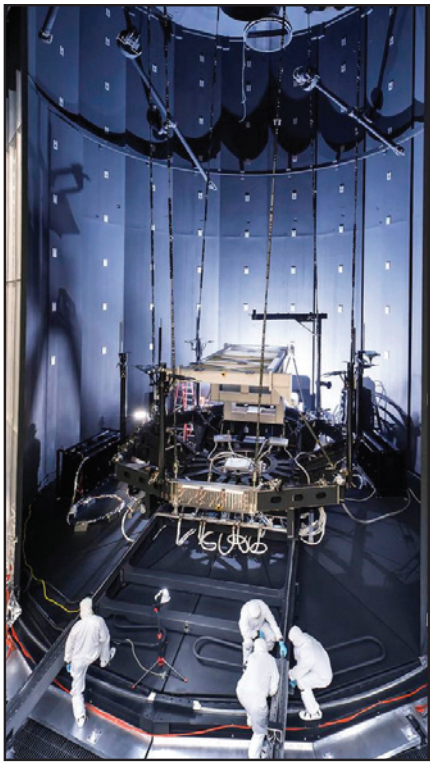

CONNECTOR FINISH CLASSES

Electrodeposited Nickel

Conductivity +++++

Corrosion Resistance

-65° to +200°C

Glenair Code ZL

D38999 Class N

RoHS MATERIALS

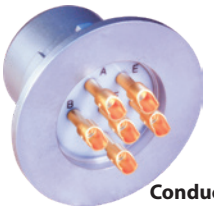

Passivated

Conductivity ++++++

Corrosion Resistance

-65° to +200°C

Glenair Code Z1 and Z1S (space)

D38999 Class Y and H (space)

RoHS MATERIALS

38999 SERIES IV ACCESSORIES

Glenair offers a full range of QPL D38999 accessories, contact the factory for details

SUPPORTED SHELL STYLES

Jam-Nut Receptacle

Panel mount Receptacle

Solder Mount Receptacle

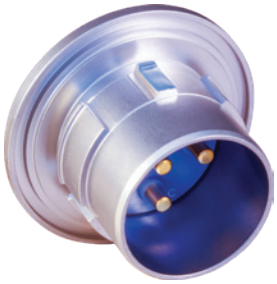

Weld Mount Receptacle

SuperNine® Series IV Hermetic

MIL-DTL-38999 Series IV Type, QPL Qualified
38999/41 panel mount receptacle

HOW TO ORDER

Sample Part Number	D38999/41	Y	B	35	P	N

D38999	**38999/41** = Panel mount receptacle
Class	**N** = Hermetic, CRES, nickel finish, conductive, -65°C to 200°C **Y** = Hermetic, CRES, passivate finish, conductive, -65°C to 200°C **H** = Hermetic, CRES, passivate finish, conductive, -65°C to 200°C (space grade)
Shell Size	**B**, **C**, **D**, **E**, **F**, **G**, **H**, **J**
Insert Arrangement	Per MIL-STD-1560; See reference information section for details
Contact Style	**P** = Pin, solder cup **X** = Pin, eyelet **C** = Pin, PCB flex feedthrough **S** = Socket, solder cup **Z** = Socket, eyelet **D** = Socket, PCB flex feedthrough
Polarization	**N** (Normal), **A**, **B**, **C**, **D**, **K**, **L**, **M**, **R**;see polarization positions table

DIMENSIONS

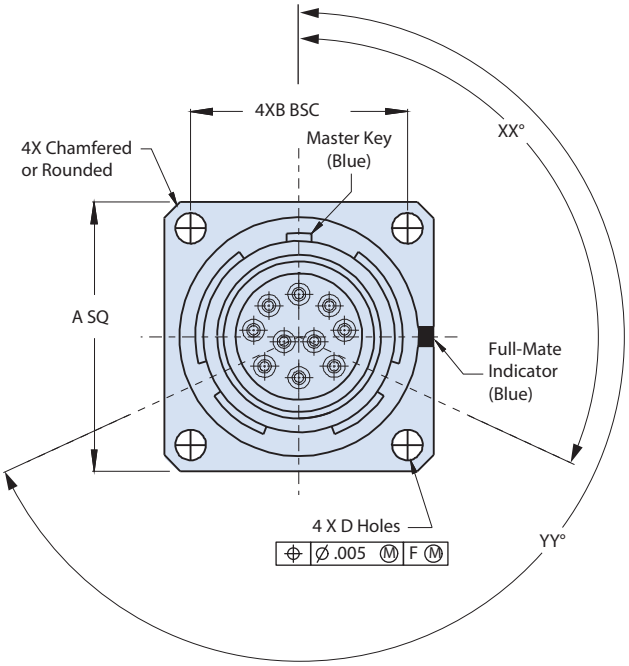

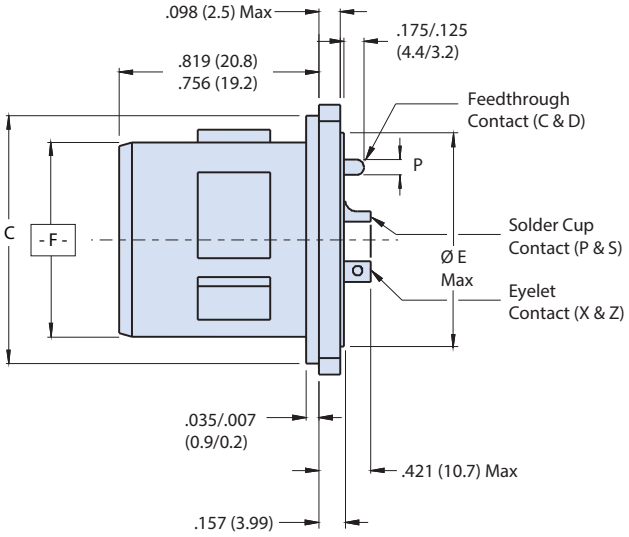

WIRE ACCOMMODATION

Contact Size	Wire Gauge
22D	#22 - #28
20	#20 - #24
16	#16 - #20
12	#12 - #14

POLARIZATION POSITION

	N	A	B	C	D	K	L	M	R
XX	110°	100°	90°	80°	70°	120°	120°	120°	120°
YY	250°	260°	270°	280°	290°	255°	265°	275°	285°

© 2025 Glenair, Inc • 1211 Air Way, Glendale, CA 91201 • 818-247-6000 • www.glenair.com • U.S. CAGE code 06324 • SuperNine Series IV
Dimensions in Inches (millimeters) are subject to change without notice.

SuperNine® Series IV Hermetic

MIL-DTL-38999 Series IV Type, COTS equivalent
234-100-H2 panel mount receptacle

HOW TO ORDER

Sample Part Number	234-100-H2	Z1	11	-35	P	N

Series / Basic Part No.	**234-100-H2** = Hermetic, panel mount receptacle
Material/Finish*	**ZL** = CRES, nickel finish, conductive, -65°C to 200°C **Z1** = CRES, passivate finish, conductive, -65°C to 200°C **Z1S** = Hermetic, CRES, passivate finish, conductive, -65°C to 200°C (space grade)
Shell Size	**11**, **13**, **15**, **17**, **19**, **21**, **23**, **25**
Insert Arrangement	Per MIL-STD-1560; See reference information section for details
Contact Style	**P** = Pin, solder cup **X** = Pin, eyelet **C** = Pin, PCB flex feedthrough **S** = Socket, solder cup **Z** = Socket, eyelet **D** = Socket, PCB flex feedthrough
Polarization	**N** (Normal), **A**, **B**, **C**, **D**, **K**, **L**, **M**, **R**; see polarization position position table

CONTACT SIZE

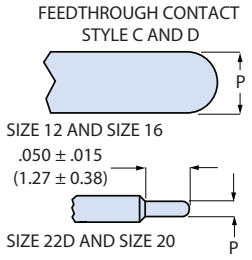

Contact Size	ø P
22D	.011 (0.28) .015 (0.38)
20	.024 (0.61) .028 (0.71)
16	.0635 (1.61) .0615 (1.56)
12	.095 (2.41) .093 (2.36)

DIMENSIONS

Shell Size Code	Shell Size	A Sq	B Bsc	C Dia	D Dia	Ø E Max
B	11	1.051 (26.7) 1.008 (25.6)	.812 (20.6)	.793 (20.1) .778 (19.8)	.138 (3.5) .122 (3.1)	.625 (15.88)
C	13	1.145 (29.1) 1.102 (28.0)	.906 (23.0)	.919 (23.3) .904 (23.0)	.138 (3.5) .122 (3.1)	.749 (19.02)
D	15	1.240 (31.5) 1.197 (30.4)	.969 (24.6)	1.044 (26.5) 1.029 (26.1)	.138 (3.5) .122 (3.1)	.906 (23.01)
E	17	1.334 (33.9) 1.291 (32.8)	1.062 (27.0)	1.170 (29.7) 1.155 (29.3)	.138 (3.5) .122 (3.1)	1.016 (25.81)
F	19	1.460 (37.1) 1.417 (36.0)	1.156 (29.4)	1.294 (32.9) 1.279 (32.5)	.138 (3.5) .122 (3.1)	1.141 (28.98)
G	21	1.583 (40.2) 1.539 (39.1)	1.250 (31.8)	1.419 (36.0) 1.404 (35.7)	.138 (3.5) .122 (3.1)	1.266 (32.16)
H	23	1.709 (43.4) 1.665 (42.3)	1.375 (34.9)	1.544 (39.2) 1.529 (38.8)	.157 (4.0) .142 (3.6)	1.375 (34.92)
J	25	1.835 (46.6) 1.791 (45.5)	1.500 (38.1)	1.670 (42.4) 1.654 (42.0)	.157 (4.0) .142 (3.6)	1.484 (37.69)

© 2025 Glenair, Inc • 1211 Air Way, Glendale, CA 91201 • 818-247-6000 • www.glenair.com • U.S. CAGE code 06324 • SuperNine Series IV

Dimensions in Inches (millimeters) are subject to change without notice.

SuperNine® Series IV Hermetic

MIL-DTL-38999 Series IV Type, QPL Qualified
38999/43 jam-nut mount receptacle

HERMETIC CONNECTORS

HOW TO ORDER

Sample Part Number	D38999/43	Y	B	35	P	N

D38999	**38999/43** = Jam-Nut receptacle
Class	**N** = Hermetic, CRES, nickel finish, conductive, -65°C to 200°C **Y** = Hermetic, CRES, passivate finish, conductive, -65°C to 200°C **H** = Hermetic, CRES, passivate finish, conductive, -65°C to 200°C (space grade)
Shell Size	**B**, **C**, **D**, **E**, **F**, **G**, **H**, **J**
Insert Arrangement	Per MIL-STD-1560; See reference information section for details
Contact Style	**P** = Pin, solder cup; **X** = Pin, eyelet **C** = Pin, PCB flex feedthrough; **S** = Socket, solder cup **Z** = Socket, eyelet; **D** = Socket, PCB flex feedthrough
Polarization	**N** (Normal), **A**, **B**, **C**, **D**, **K**, **L**, **M**, **R**; see polarization positions table

Contact Size

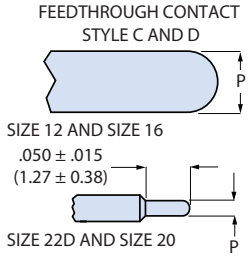

Contact Size	ø P
22D	.011 (0.28) .015 (0.38)
20	.024 (0.61) .028 (0.71)
16	.0635 (1.61) .0615 (1.56)
12	.095 (2.41) .093 (2.36)

DIMENSIONS

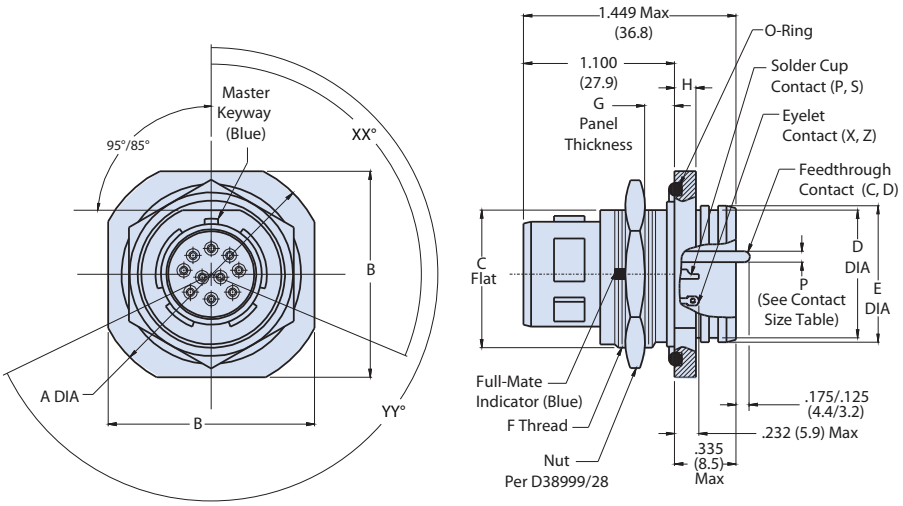

Wire Accommodation

Contact Size	Wire Gauge
22D	#22 - #28
20	#20 - #24
16	#16 - #20
12	#12 - #14

Polarization Position

	N	A	B	C	D	K	L	M	R
XX	110°	100°	90°	80°	70°	120°	120°	120°	120°
YY	250°	260°	270°	280°	290°	255°	265°	275°	285°

© 2025 Glenair, Inc • 1211 Air Way, Glendale, CA 91201 • 818-247-6000 • www.glenair.com • U.S. CAGE code 06324 • SuperNine Series IV
Dimensions in Inches (millimeters) are subject to change without notice.

SuperNine® Series IV Hermetic

MIL-DTL-38999 Series IV Type, COTS equivalent
234-100-H7 jam-nut mount receptacle

HOW TO ORDER

Sample Part Number	234-100-H7	Z1	11	-35	P	N
Series / Basic Part No.	**234-100-H7** = Hermetic, jam-nut mount hermetic receptacle					
Material/Finish*	**ZL** = CRES, nickel finish, conductive, -65°C to 200°C **Z1** = CRES, passivate finish, conductive, -65°C to 200°C **Z1S** = Hermetic, CRES, passivate finish, conductive, -65°C to 200°C (space grade)					
Shell Size	**11**, **13**, **15**, **17**, **19**, **21**, **23**, **25**					
Insert Arrangement	Per MIL-STD-1560; See reference information section for details					
Contact Style	**P** = Pin, solder cup **C** = Pin, PCB flex feedthrough **Z** = Socket, eyelet **X** = Pin, eyelet **S** = Socket, solder cup **D** = Socket, PCB flex feedthrough					
Polarization	**N** (Normal), **A**, **B**, **C**, **D**, **K**, **L**, **M**, **R** see polarization position position table					

DIMENSIONS

Shell Size Code	Shell Size	A Dia	B	C Flat	D Dia	E Dia ±.010(0.3)	F Thread ISO Metric 1.0-6g	G ±.033(0.8)	H ±.012(0.3)
B	11	1.385(35.2) 1.362(34.6)	1.267 (32.18) 1.232 (31.29)	.754(19.2) .745(18.9)	.732(18.6) .716(18.2)	.769(19.5)	M20	.092(2.3)	.106(2.7)
C	13	1.511(38.4) 1.488(37.8)	1.393 (35.38) 1.358 (34.49)	.941(23.9) .932(23.7)	.858(21.8) .839(21.3)	.899(22.8)	M25	.092(2.3)	.106(2.7)
D	15	1.637(41.6) 1.614(41.0)	1.519 (38.58) 1.484 (37.69)	1.065(27.1) 1.056(26.8)	.984(25.0) .968(24.6)	1.025(26.0)	M28	.092(2.3)	.106(2.7)
E	17	1.763(44.8) 1.740(44.2)	1.641 (41.68) 1.606 (40.79)	1.190(30.2) 1.181(30.0)	1.110(28.2) 1.091(27.7)	1.147(29.1)	M32	.092(2.3)	.106(2.7)
F	19	1.948(49.5) 1.925(48.9)	1.830 (46.48) 1.795 (45.59)	1.316(33.4) 1.306(33.2)	1.236(31.4) 1.220(31.0)	1.273(32.3)	M35	.092(2.3)	.137(3.5)
G	21	2.074(52.7) 2.051(52.1)	1.956 (49.68) 1.921 (48.79)	1.441(36.6) 1.431(36.3)	1.358(34.5) 1.342(34.1)	1.399(35.5)	M38	.092(2.3)	.137(3.5)
H	23	2.200(55.9) 2.177(55.3)	2.078 (52.78) 2.043 (51.89)	1.565(39.8) 1.556(39.5)	1.484(37.7) 1.468(37.3)	1.525(38.7)	M41	.092(2.3)	.137(3.5)
J	25	2.326(59.1) 2.299(58.4)	2.204 (55.98) 2.169 (55.09)	1.692(43.0) 1.681(42.7)	1.610(40.9) 1.594(40.5)	1.647(41.8)	M44	.092(2.3)	.137(3.5)

PANEL CUT-OUT DIMENSIONS

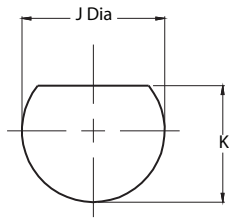

Panel Cut-Out

Shell Size Code	J Dia	K	Shell Size Code	J Dia	K
B	.835 (21.21) .825 (20.96)	.771 (19.58) .761 (19.33)	F	1.395 (35.43) 1.385 (35.18)	1.335 (33.91) 1.325 (33.66)
C	1.020 (25.91) 1.010 (25.65)	.955 (24.26) .945 (24.00)	G	1.520 (38.61) 1.510 (38.35)	1.460 (37.08) 1.450 (36.83)
D	1.145 (29.08) 1.135 (28.83)	1.085 (27.56) 1.075 (27.31)	H	1.645 (41.78) 1.635 (41.53)	1.585 (40.26) 1.575 (40.01)
E	1.270 (32.26) 1.260 (32.00)	1.210 (30.73) 1.200 (30.48)	J	1.770 (44.96) 1.760 (44.70)	1.710 (43.43) 1.700 (43.18)

© 2025 Glenair, Inc • 1211 Air Way, Glendale, CA 91201 • 818-247-6000 • www.glenair.com • U.S. CAGE code 06324 • SuperNine Series IV

Dimensions in Inches (millimeters) are subject to change without notice.

MIL-DTL-38999 Series IV Type
234-111 Hermetic Receptacle with Band Porch or Accessory Threads

HOW TO ORDER

Sample Part Number	234-111	-H2	T	Z1	13	-35	S	N

Basic Part Number	**234-111** Hermetic Receptacle with Band Porch or Accessory Threads
Mounting Style	**H2** = Panel mount **H7** = Jam-Nut Mount **H8** = Weld Mount
Rear Attacment Type	**B** = Banding Porch **T** = Accessory Threads
Finish	See Finish Table
Shell Size	**11**, **13**, **15**, **17**, **19**, **21**, **23**, **25**
Contact Arrangement	Per MIL-STD-1560
Contact Style	**P** = Pin Face, Solder Cup **S** = Skt Face, Solder Cup **X** = Pin Face, Eyelet **Z** = Skt Face, Eyelet
Keying Position	Specify Position Per Key Position Table Specify **N** For Normal

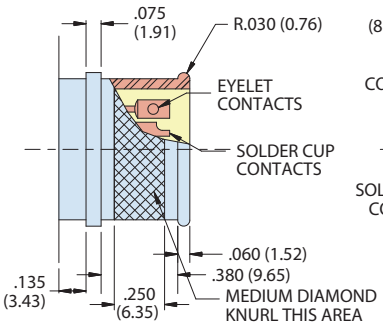

CONTACT TERMINATION AND
BANDING PORCH DETAIL
TYPICAL ALL MOUNTING STYLES

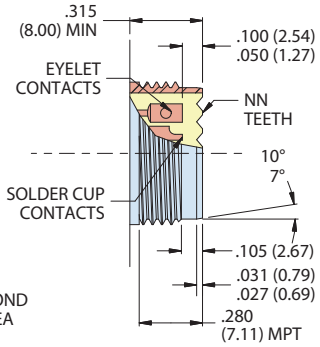

CONTACT TERMINATION AND
ACCESSORY THD DETAIL
TYPICAL ALL MOUNTING STYLES

Shell Size	"NN" Teeth
11	16
13	20
15	24
17	28
19	32
21	36
23	40
25	44

NOTES

1. Material / finish:
   - Shell, jam-nut - 300 series cres / per p/n development
   - Contacts, hermetic - nickel-iron alloy / gold plate
   - Contacts, socket - copper alloy / gold plate
   - Insulator, hermetic - vitreous glass / none
   - Insulator, socket - rigid dielectric / none
   - Seals, o-rings - fluorosilicone elastomer
2. Test Criteria:
   - DWV - PER MIL-STD-1560 service rating (table iii)
   - IR - 5000 MEGOHMS MIN @ 500 VDC
   - Leak Rate - <1 X 10^{-7} ccHe/sec @ 1 ATM Delta P
3. Glenair 234-111 conforms to mechanical, performance, and dimensional requirements of dtl-38999 Series iv hermetic receptacles except for the addition of accessory threads.
4. Glenair 234-111 is designed to mate with any QPL MFRS D38999/46 or /47 plug with the same shell size, polarization, contact arrangement, and opposite contact gender.
5. Glenair 234-111 is available with solder cup or eyelet terminated pin or socket face, and with specified finishes. Consult factory for alternative finishes or arrangements.

KEYING POSITION

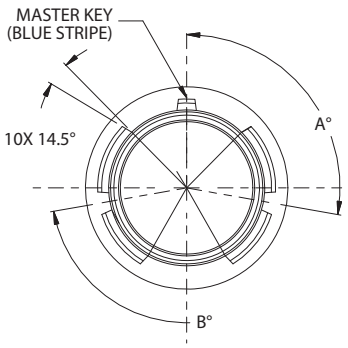

Key Position	A°	B°
N	110°	250°
A	100°	260°
B	90°	270°
C	80°	280°
D	70°	290°
K	120°	255°
L	120°	265°
M	120°	275°
R	120°	285°

DWV VOLTAGE LEVELS @ SEA LEVEL

Service Rating	Voltage Ac Rms 60hz
M	1300 VAC
I	1800 VAC
II	2300 VAC
N	1000 VAC

MATERIAL/FINISH

D-38999 Class	234-111 Class	Shell Material	FinishDescription
N	ZL	Stainless Steel	Nickel Plated
Y	Z1		Passivated

© 2025 Glenair, Inc • 1211 Air Way, Glendale, CA 91201 • 818-247-6000 • www.glenair.com • U.S. CAGE code 06324 • SuperNine Series IV
Dimensions in Inches (millimeters) are subject to change without notice.

MIL-DTL-38999 Series IV Type
234-111 Hermetic Receptacle with Band Porch or Accessory Threads

-H2 PANEL MOUNT DIMENSIONS

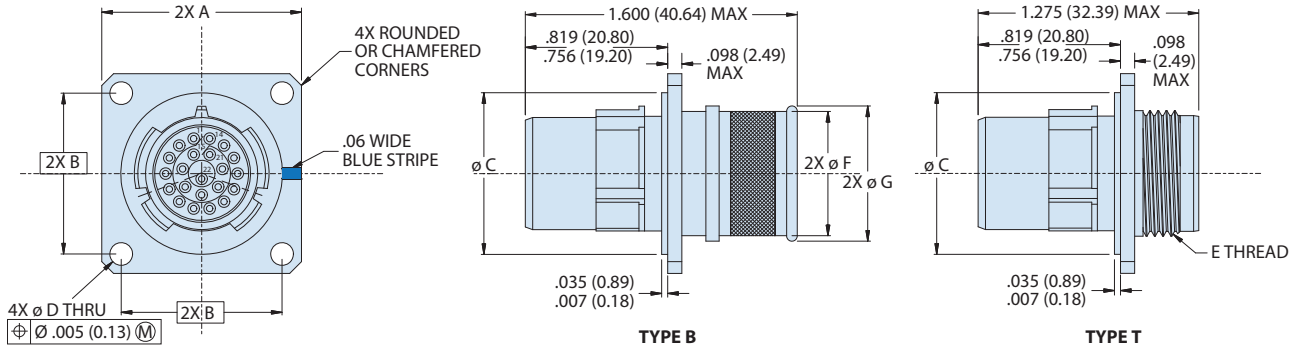

Shell Size Code	Shell Size	A Sq	B Bsc	C Dia	D Dia	E ISO THD Metric	F Dia	G Dia
B	11	1.051 (26.70) 1.008 (25.60)	.812 (20.62)	.793 (20.14) .778 (19.76)	.138 (3.51) .122 (3.10)	M15 X 1.0-6g	.600 (15.24)	.662 (16.81)
C	13	1.145 (29.08) 1.102 (27.99)	.906 (23.01)	.919 (23.34) .904 (22.96)	.138 (3.51) .122 (3.10)	M18 X 1.0-6g	.700 (17.78)	.762 (19.35)
D	15	1.240 (31.50) 1.197 (30.40)	.969 (24.61)	1.044 (26.52) 1.029 (26.14)	.138 (3.51) .122 (3.10)	M22 X 1.0-6g	.835 (21.21)	.898 (22.81)
E	17	1.334 (33.88) 1.291 (32.79)	1.062 (26.97)	1.170 (29.72) 1.155 (29.34)	.138 (3.51) .122 (3.10)	M25 X 1.0-6g	.960 (24.38)	1.022 (25.96)
F	19	1.460 (37.08) 1.417 (35.99)	1.156 (29.36)	1.294 (32.87) 1.279 (32.49)	.138 (3.51) .122 (3.10)	M28 X 1.0-6g	1.062 (26.97)	1.125 (28.58)
G	21	1.583 (40.21) 1.539 (39.09)	1.250 (31.75)	1.419 (36.04) 1.404 (35.66)	.138 (3.51) .122 (3.10)	M31 X 1.0-6g	1.188 (30.18)	1.266 (32.16)
H	23	1.709 (43.41) 1.665 (42.29)	1.375 (34.92)	1.544 (39.22) 1.529 (38.84)	.157 (3.99) .142 (3.61)	M34 X 1.0-6g	1.275 (32.39)	1.338 (33.99)
J	25	1.835 (46.61) 1.791 (45.49)	1.500 (38.10)	1.670 (42.42) 1.654 (42.01)	.157 (3.99) .142 (3.61)	M37 X 1.0-6g	1.475 (37.47)	1.538 (39.07)

PANEL CUT-OUT DIMENSIONS

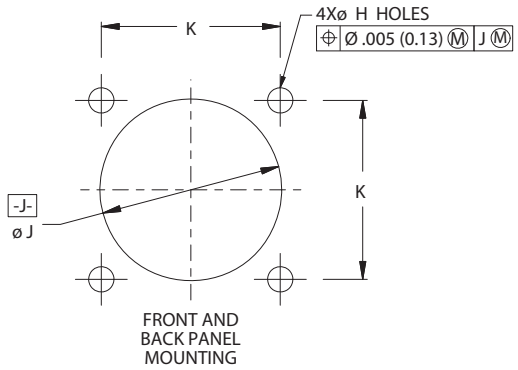

Shell Size Code	Shell Size	ø H Holes	ø J Min		K Bsc
			Type B	Type T	
B	11	.133 (3.38); .123 (3.12)	.796 (20.22)	.845 (21.46)	.812 (20.62)
C	13	.133 (3.38); .123 (3.12)	.921 (23.39)	.965 (24.51)	.906 (23.01)
D	15	.133 (3.38); .123 (3.12)	1.047 (26.59)	1.095 (27.81)	.969 (24.61)
E	17	.133 (3.38); .123 (3.12)	1.218 (30.94)	1.235 (31.37)	1.062 (26.97)
F	19	.133 (3.38); .123 (3.12)	1.296 (32.92)	1.365 (34.67)	1.156 (29.36)
G	21	.133 (3.38); .123 (3.12)	1.421 (36.09)	1.485 (37.72)	1.250 (31.75)
H	23	.159 (4.04); .149 (3.78)	1.546 (39.27)	1.605 (40.77)	1.375 (34.92)
J	25	.155 (3.94); .145 (3.68)	1.672 (42.47)	1.725 (43.82)	1.500 (38.10)

© 2025 Glenair, Inc • 1211 Air Way, Glendale, CA 91201 • 818-247-6000 • www.glenair.com • U.S. CAGE code 06324 • SuperNine Series IV
Dimensions in Inches (millimeters) are subject to change without notice.

MIL-DTL-38999 Series IV Type
234-111 Hermetic Receptacle with Band Porch or Accessory Threads

-H7 JAM-NUT MOUNT DIMENSIONS

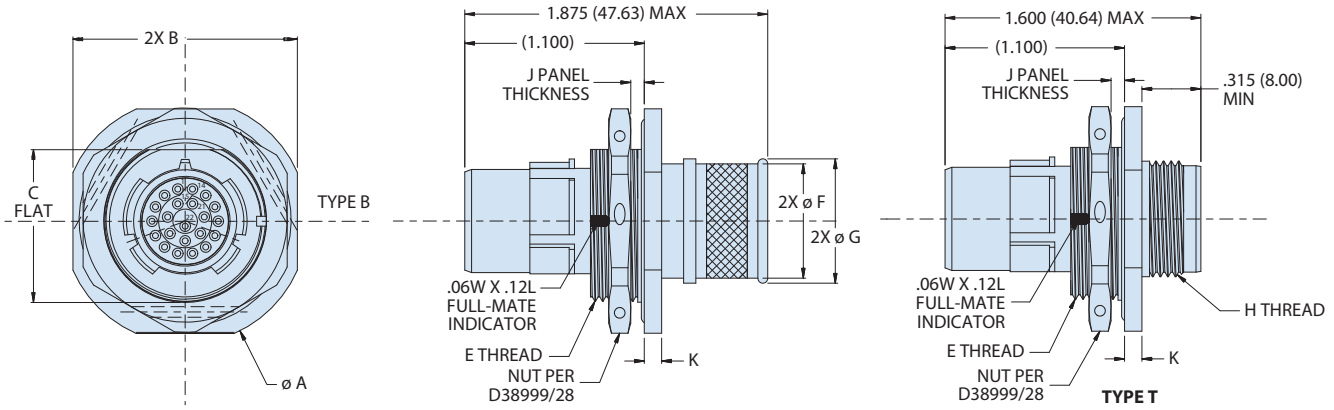

Shell Size Code	Shell Size	A Dia	B	C Flat	E Thread ISO Metric	F Dia	G Dia	H Thread ISO Metric	J	K
B	11	1.385 (35.18) 1.362 (34.59)	1.267 (32.18) 1.232 (31.29)	.754 (19.15) .744 (18.90)	M20 X 1.0-6g	.600 (15.24)	.662 (16.81)	M15 X 1.0-6g	.125 (3.18) .059 (1.50)	.118 (3.00) .094 (2.39)
C	13	1.511 (38.38) 1.488 (37.80)	1.393 (35.38) 1.358 (34.49)	.941 (23.90) .931 (23.65)	M25 X 1.0-6g	.700 (17.78)	.762 (19.35)	M18 X 1.0-6g	.125 (3.18) .059 (1.50)	.118 (3.00) .094 (2.39)
D	15	1.637 (41.58) 1.614 (41.00)	1.519 (38.58) 1.484 (37.69)	1.066 (27.08) 1.056 (26.82)	M28 X 1.0-6g	.835 (21.21)	.898 (22.81)	M22 X 1.0-6g	.125 (3.18) .059 (1.50)	.118 (3.00) .094 (2.39)
E	17	1.763 (44.78) 1.740 (44.20)	1.641 (41.68) 1.606 (40.79)	1.191 (30.25) 1.181 (30.00)	M32 X 1.0-6g	.960 (24.38)	1.022 (25.96)	M25 X 1.0-6g	.125 (3.18) .059 (1.50)	.118 (3.00) .094 (2.39)
F	19	1.948 (49.48) 1.925 (48.90)	1.830 (46.48) 1.795 (45.59)	1.316 (33.43) 1.306 (33.17)	M35 X 1.0-6g	1.062 (26.97)	1.125 (28.58)	M28 X 1.0-6g	.125 (3.18) .059 (1.50)	.149 (3.78) .125 (3.18)
G	21	2.074 (52.68) 2.051 (52.10)	1.956 (49.68) 1.921 (48.79)	1.441 (36.60) 1.431 (36.35)	M38 X 1.0-6g	1.188 (30.18)	1.266 (32.16)	M31 X 1.0-6g	.125 (3.18) .059 (1.50)	.149 (3.78) .125 (3.18)
H	23	2.200 (55.88) 2.177 (55.30)	2.078 (52.78) 2.043 (51.89)	1.565 (39.75) 1.556 (39.52)	M41 X 1.0-6g	1.275 (32.39)	1.338 (33.99)	M34 X 1.0-6g	.125 (3.18) .059 (1.50)	.149 (3.78) .125 (3.18)
J	25	2.326 (59.08) 2.299 (58.39)	2.204 (55.98) 2.169 (55.09)	1.692 (42.98) 1.681 (42.70)	M44 X 1.0-6g	1.475 (37.47)	1.538 (39.07)	M37 X 1.0-6g	.125 (3.18) .059 (1.50)	.149 (3.78) .125 (3.18)

PANEL CUT-OUT DIMENSIONS

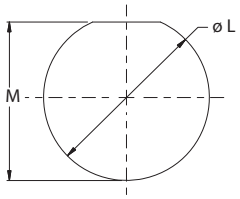

RECOMMENDED PANEL CUT-OUT

Shell Size Code	Shell Size	L Dia	M
B	11	.835 (21.21); .825 (20.96)	.771 (19.58); .761 (19.33)
C	13	1.020 (25.91); 1.010 (25.65)	.955 (24.26); .945 (24.00)
D	15	1.145 (29.08); 1.135 (28.83)	1.085 (27.56); 1.075 (27.30)
E	17	1.270 (32.26); 1.260 (32.00)	1.210 (30.73); 1.200 (30.48)
F	19	1.395 (35.43); 1.385 (35.18)	1.335 (33.91); 1.325 (33.65)
G	21	1.520 (38.61); 1.510 (38.35)	1.460 (37.08); 1.450 (36.83)
H	23	1.645 (41.78); 1.635 (41.53)	1.585 (40.26); 1.575 (40.00)
J	25	1.770 (44.96); 1.760 (44.70)	1.710 (43.43); 1.700 (43.18)

© 2025 Glenair, Inc • 1211 Air Way, Glendale, CA 91201 • 818-247-6000 • www.glenair.com • U.S. CAGE code 06324 • SuperNine Series IV
Dimensions in Inches (millimeters) are subject to change without notice.

MIL-DTL-38999 Series IV Type
234-111 Hermetic Receptacle with Band Porch or Accessory Threads

-H8 WELD MOUNT DIMENSIONS

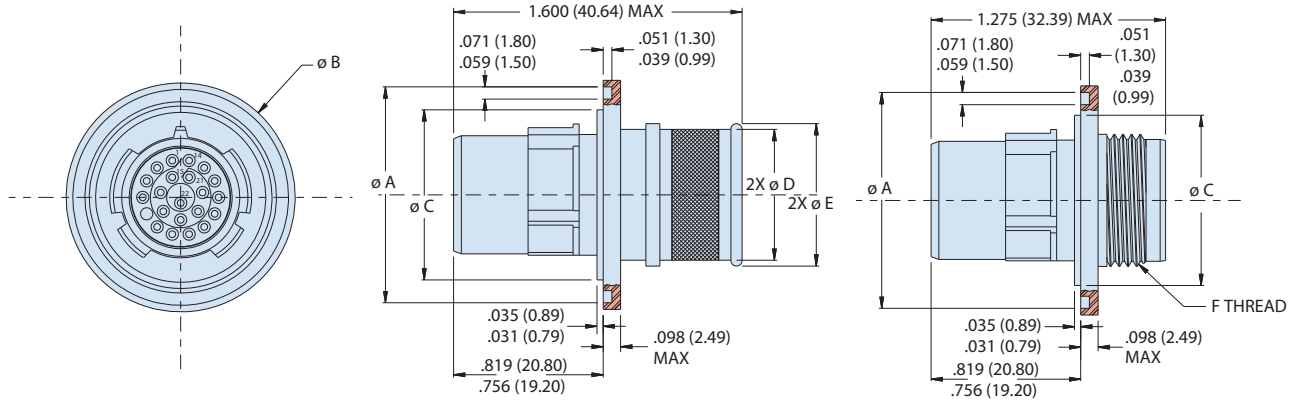

Shell Size Code	Shell Size	Ø A	Ø B	Ø C	Ø D	Ø E	F Thread ISO Metric
B	11	1.035 (26.29) 1.024 (26.01)	1.106 (28.09) 1.094 (27.79)	.793 (20.14) .778 (19.76)	.600 (15.24)	.662 (16.81)	M15 X 1.0-6g
C	13	1.161 (29.49) 1.150 (29.21)	1.232 (31.29) 1.220 (30.99)	.919 (23.34) .904 (22.96)	.700 (17.78)	.762 (19.35)	M18 X 1.0-6g
D	15	1.287 (32.69) 1.276 (32.41)	1.358 (34.49) 1.346 (34.19)	1.044 (26.52) 1.029 (26.14)	.835 (21.21)	.898 (22.81)	M22 X 1.0-6g
E	17	1.374 (34.90) 1.362 (34.59)	1.445 (36.70) 1.433 (36.40)	1.170 (29.72) 1.155 (29.34)	.960 (24.38)	1.022 (25.96)	M25 X 1.0-6g
F	19	1.520 (38.61) 1.508 (38.30)	1.591 (40.41) 1.579 (40.11)	1.294 (32.87) 1.279 (32.49)	1.062 (26.97)	1.125 (28.58)	M28 X 1.0-6g
G	21	1.661 (42.19) 1.650 (41.91)	1.732 (43.99) 1.720 (43.69)	1.419 (36.04) 1.404 (35.66)	1.188 (30.18)	1.265 (32.13)	M31 X 1.0-6g
H	23	1.827 (46.41) 1.815 (46.10)	1.898 (48.21) 1.886 (47.90)	1.544 (39.22) 1.529 (38.84)	1.275 (32.39)	1.338 (33.99)	M34 X 1.0-6g
J	25	1.913 (48.59) 1.902 (48.31)	1.984 (50.39) 1.972 (50.09)	1.669 (42.39) 1.654 (42.01)	1.475 (37.47)	1.538 (39.07)	M37 X 1.0-6g

PANEL CUT-OUT DIMENSIONS

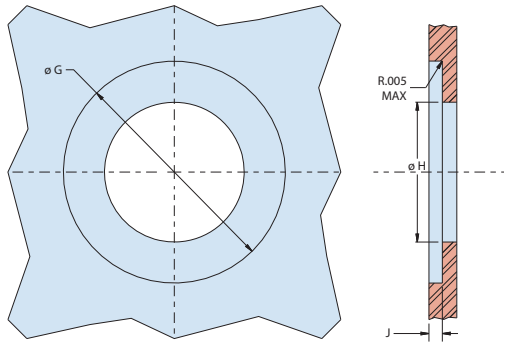

Shell Size	Ø G	Ø H Type B	Ø H Type T	Depth J ±.005
11	1.112/1.107 (28.24/28.12)	.750 (19.05)	.845 (21.46)	.100 (2.54)
13	1.238/1.233 (31.45/31.32)	.850 (21.59)	.965 (24.51)	.100 (2.54)
15	1.364/1.359 (34.65/34.52)	.985 (25.02)	1.095 (27.81)	.100 (2.54)
17	1.451/1.446 (36.86/36.73)	1.110 (28.19)	1.235 (31.37)	.100 (2.54)
19	1.597/1.592 (40.56/40.44)	1.215 (30.86)	1.485 (37.72)	.100 (2.54)
21	1.738/1.733 (44.15/44.02)	1.350 (34.29)	1.605 (40.77)	.100 (2.54)
23	1.894/1.899 (48.11/48.23)	1.425 (36.20)	1.725 (43.82)	.100 (2.54)
25	1.990/1.985 (50.55/50.42)	1.625 (41.28)	1.825 (46.36)	.100 (2.54)

© 2025 Glenair, Inc • 1211 Air Way, Glendale, CA 91201 • 818-247-6000 • www.glenair.com • U.S. CAGE code 06324 • SuperNine Series IV
Dimensions in Inches (millimeters) are subject to change without notice.

SuperNine® Series IV Hermetic

MIL-DTL-38999 Series IV Type, QPL Qualified
38999/45 solder mount receptacle

HOW TO ORDER

Sample Part Number	D38999/45	Y	B	35	P	N

D38999	**38999/45** = Solder mount receptacle
Class	**N** = Hermetic, CRES, nickel finish, conductive, -65°C to 200°C **Y** = Hermetic, CRES, passivate finish, conductive, -65°C to 200°C **H** = Hermetic, CRES, passivate finish, conductive, -65°C to 200°C (space grade)
Shell Size	**B**, **C**, **D**, **E**, **F**, **G**, **H**, **J**
Insert Arrangement	Per MIL-STD-1560; See reference information section for details
Contact Style	**P** = Pin, solder cup **C** = Pin, PCB flex feedthrough **Z** = Socket, eyelet **X** = Pin, eyelet **S** = Socket, solder cup **D** = Socket, PCB flex feedthrough
Polarization	**N** (Normal), **A**, **B**, **C**, **D**, **K**, **L**, **M**, **R**; see polarization positions table

*Additional material/finish options are available below.

DIMENSIONS

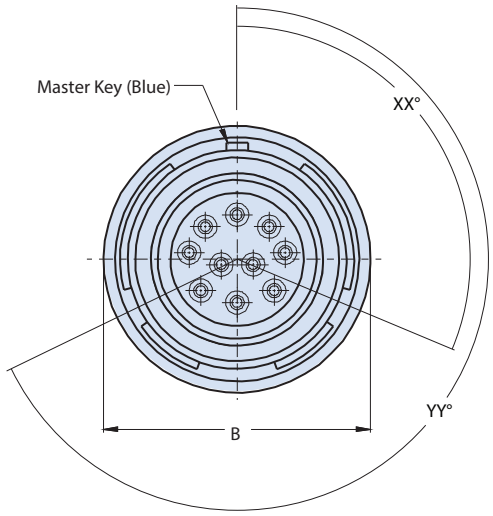

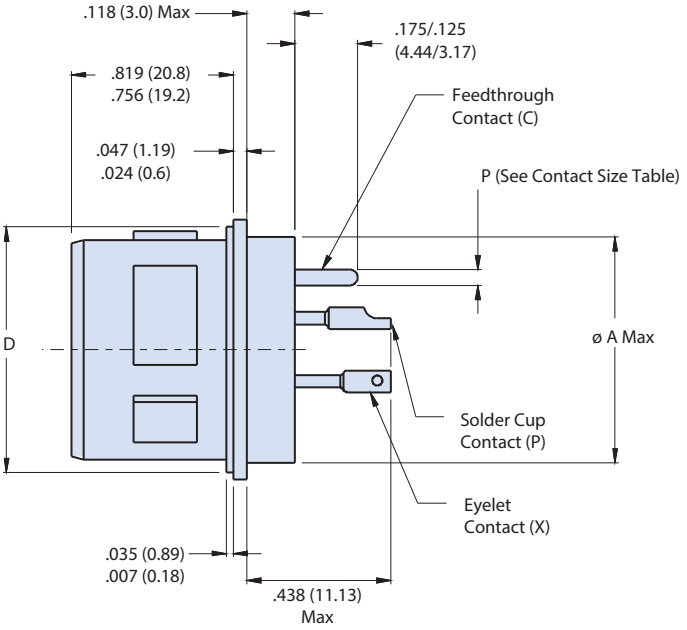

Wire Accommodation

Contact Size	Wire Gauge
22D	#22 - #28
20	#20 - #24
16	#16 - #20
12	#12 - #14

Polarization

	N	A	B	C	D	K	L	M	R
XX	110°	100°	90°	80°	70°	120°	120°	120°	120°
YY	250°	260°	270°	280°	290°	255°	265°	275°	285°

© 2025 Glenair, Inc • 1211 Air Way, Glendale, CA 91201 • 818-247-6000 • www.glenair.com • U.S. CAGE code 06324 • SuperNine Series IV
Dimensions in Inches (millimeters) are subject to change without notice.

SuperNine® Series IV Hermetic

MIL-DTL-38999 Series IV Type, COTS equivalent
234-100-H5 solder mount receptacle

HOW TO ORDER

Sample Part Number	234-100-H5	Z1	11	-35	P	N

Series / Basic Part No.	**234-100-H5** = Hermetic, solder mount receptacle
Material/Finish*	**ZL** = CRES, nickel finish, conductive, -65°C to 200°C **Z1** = CRES, passivate finish, conductive, -65°C to 200°C **Z1S** = Hermetic, CRES, passivate finish, conductive, -65°C to 200°C (space grade)
Shell Size	**11**, **13**, **15**, **17**, **19**, **21**, **23**, **25**
Insert Arrangement	Per MIL-STD-1560; See reference information section for details
Contact Style	**P** = Pin, solder cup **X** = Pin, eyelet **C** = Pin, PCB flex feedthrough **S** = Socket, solder cup **Z** = Socket, eyelet **D** = Socket, PCB flex feedthrough
Polarization	**N** (Normal), **A**, **B**, **C**, **D**, **K**, **L**, **M**, **R** see polarization table

CONTACT SIZE

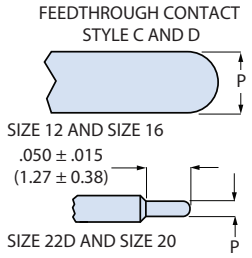

Contact Size	ø P
22D	.011 (0.28) .015 (0.38)
20	.024 (0.61) .028 (0.71)
16	.0635 (1.61) .0615 (1.56)
12	.095 (2.41) .093 (2.36)

DIMENSIONS

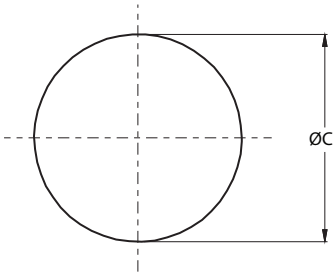

Panel Cut-Out

Shell Size Code	Shell Size	Ø A Max	Ø B Max	Ø C	D
B	11	.783(19.9)	.862(21.9)	.794 (20.17) .784 (19.91)	.793(20.1) .778(19.8)
C	13	.909(23.1)	.988(25.1)	.920 (23.37) .910 (23.11)	.919(23.3) .904(23.0)
D	15	1.035(26.3)	1.110(28.2)	1.046 (26.57) 1.036 (26.31)	1.044(26.5) 1.028(26.1)
E	17	1.157(29.4)	1.236(31.4)	1.169 (29.71) 1.159 (29.44)	1.170(29.7) 1.155(29.3)
F	19	1.252(31.8)	1.331(33.8)	1.263 (32.08) 1.253 (31.83)	1.294(32.9) 1.279(32.5)
G	21	1.378(35.0)	1.457(37.0)	1.389 (35.28) 1.379 (35.03)	1.419(36.0) 1.404(35.7)
H	23	1.504(38.2)	1.583(40.2)	1.515 (38.48) 1.505 (38.23)	1.544(39.2) 1.528(38.8)
J	25	1.630(41.4)	1.705(43.3)	1.642 (41.71) 1.632 (41.45)	1.670(42.4) 1.654(42.0)

© 2025 Glenair, Inc • 1211 Air Way, Glendale, CA 91201 • 818-247-6000 • www.glenair.com • U.S. CAGE code 06324 • SuperNine Series IV
Dimensions in Inches (millimeters) are subject to change without notice.

SuperNine® Series IV Hermetic

MIL-DTL-38999 Series IV Type, QPL Qualified
38999/48 weld mount receptacle

HOW TO ORDER

Sample Part Number	D38999/48	Y	B	35	P	N

D38999	**38999/48** = Weld mount receptacle
Class	**N** = Hermetic, CRES, nickel finish, conductive, -65°C to 200°C **Y** = Hermetic, CRES, passivate finish, conductive, -65°C to 200°C **H** = Hermetic, CRES, passivate finish, conductive, -65°C to 200°C (space grade)
Shell Size	**B**, **C**, **D**, **E**, **F**, **G**, **H**, **J**
Insert Arrangement	Per MIL-STD-1560; See reference information section for details
Contact Style	**P** = Pin, solder cup **C** = Pin, PCB flex feedthrough **Z** = Socket, eyelet **X** = Pin, eyelet **S** = Socket, solder cup **D** = Socket, PCB flex feedthrough
Polarization	**N** (Normal), **A**, **B**, **C**, **D**, **K**, **L**, **M**, **R**; see polarization positions table

DIMENSIONS

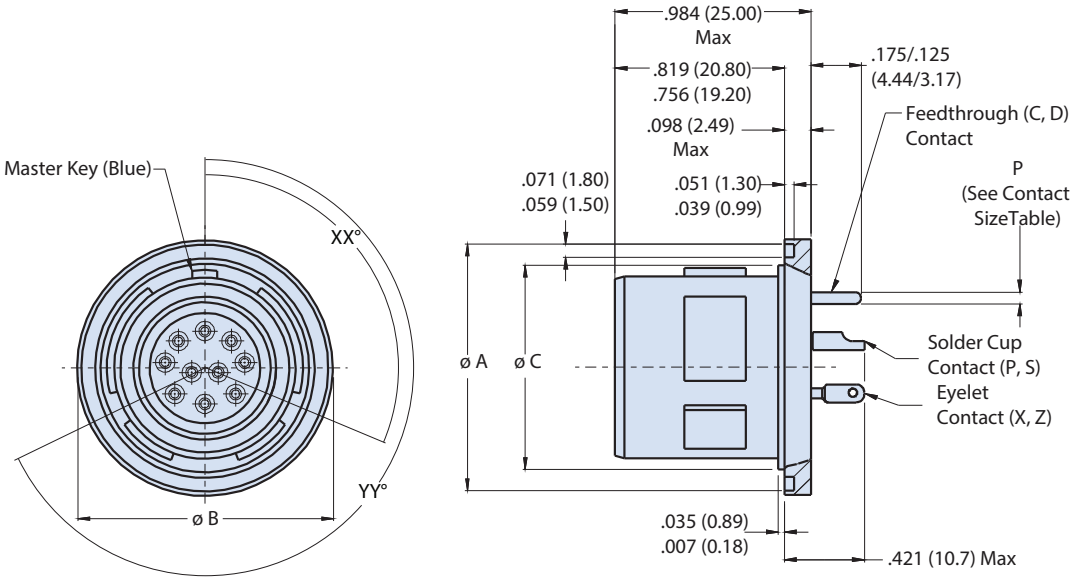

Wire Accommodation

Contact Size	Wire Gauge
22D	#22 - #28
20	#20 - #24
16	#16 - #20
12	#12 - #14

Polarization

	N	A	B	C	D	K	L	M	R
XX	110°	100°	90°	80°	70°	120°	120°	120°	120°
YY	250°	260°	270°	280°	290°	255°	265°	275°	285°

© 2025 Glenair, Inc • 1211 Air Way, Glendale, CA 91201 • 818-247-6000 • www.glenair.com • U.S. CAGE code 06324 • SuperNine Series IV
Dimensions in Inches (millimeters) are subject to change without notice.

SuperNine® Series IV Hermetic

MIL-DTL-38999 Series IV Type, COTS equivalent
234-100-H8 weld mount receptacle

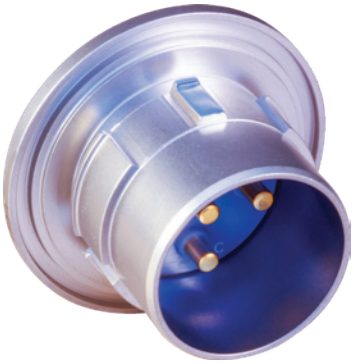

HOW TO ORDER

Sample Part Number	234-100-H8	Z1	11	-35	P	N

Series / Basic Part No.	**234-100-H8** = Hermetic, weld mount receptacle
Material/Finish*	**ZL** = CRES, nickel finish, conductive, -65°C to 200°C **Z1** = CRES, passivate finish, conductive, -65°C to 200°C **Z1S** = Hermetic, CRES, passivate finish, conductive, -65°C to 200°C (space grade)
Shell Size	**11**, **13**, **15**, **17**, **19**, **21**, **23**, **25**
Insert Arrangement	Per MIL-STD-1560; See reference information section for details
Contact Style	**P** = Pin, solder cup **X** = Pin, eyelet **C** = Pin, PCB flex feedthrough **S** = Socket, solder cup **Z** = Socket, eyelet **D** = Socket, PCB flex feedthrough
Polarization	**N** (Normal), **A**, **B**, **C**, **D**, **K**, **L**, **M**, **R** see polarization position table

CONTACT SIZE

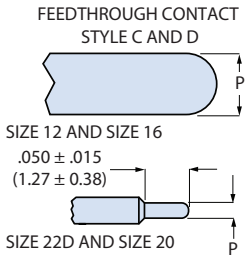

Contact Size	ø P
22D	.011 (0.28) .015 (0.38)
20	.024 (0.61) .028 (0.71)
16	.0635 (1.61) .0615 (1.56)
12	.095 (2.41) .093 (2.36)

DIMENSIONS

Shell Size Code	Shell Size	Ø A	Ø B	Ø C
B	11	1.035 (26.3) 1.024 (26.0)	1.106 (28.1) 1.094 (27.8)	.793 (20.1) .778 (19.8)
C	13	1.161 (29.5) 1.150 (29.2)	1.232 (31.3) 1.220 (31.0)	.919 (23.3) .904 (23.0)
D	15	1.287 (32.7) 1.276 (32.4)	1.358 (34.5) 1.346 (34.2)	1.044 (26.5) 1.029 (26.1)
E	17	1.374 (34.9) 1.362 (34.6)	1.445 (36.7) 1.433 (36.4)	1.170 (29.7) 1.155 (29.3)
F	19	1.520 (38.6) 1.508 (38.3)	1.591 (40.4) 1.579 (40.1)	1.294 (32.9) 1.279 (32.5)
G	21	1.661 (42.2) 1.650 (41.9)	1.732 (44.0) 1.720 (43.7)	1.419 (36.0) 1.404 (35.7)
H	23	1.827 (46.4) 1.815 (46.1)	1.898 (48.2) 1.886 (47.4)	1.544 (39.2) 1.529 (38.8)
J	25	1.913 (48.6) 1.902 (48.3)	1.984 (50.4) 1.972 (50.1)	1.669 (42.4) 1.654 (42.0)

© 2025 Glenair, Inc • 1211 Air Way, Glendale, CA 91201 • 818-247-6000 • www.glenair.com • U.S. CAGE code 06324 • SuperNine Series IV

Dimensions in Inches (millimeters) are subject to change without notice.

Glenair Mil-Spec Interconnect Technologies

Qualified Products: Glenair is a Mil-Aero connector supplier. Our product quality begins in engineering (the largest team in the high-performance interconnect business) and is realized in our "made in the USA" vertically-integrated manufacturing cells. One of the key ways we ensure both areas are functioning smoothly is to submit designs and manufactured specimens into the military QPL process administered by NAVSEA and the Defense Logistic Agency of the US government. These certification exercises are multi-year activities that test every aspect of an interconnect component's performance.

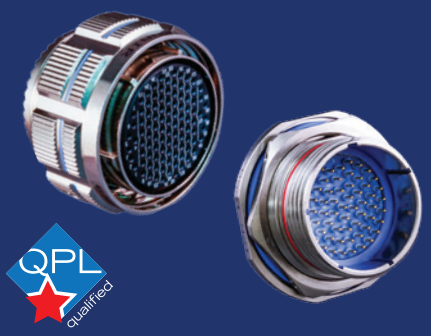

MIL-DTL-38999 Series III
Environmental Connectors

MIL-DTL-38999 Series IV
Environmental Connectors

MIL-DTL-28840 Shipboard
Connectors and Accessories

MIL-DTL-38999 Series I, II, III, and IV
Hermetic Connectors

MIL-DTL-24308
Hermetic Connectors

MIL-DTL-28876
Shipboard Fiber Optic

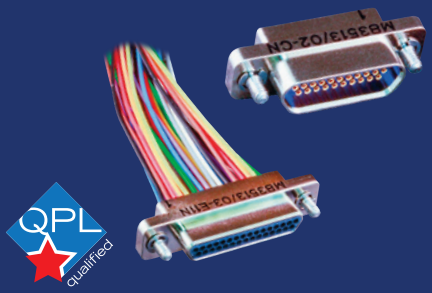

MIL-DTL-83513 Micro-D
Connectors and Accessories

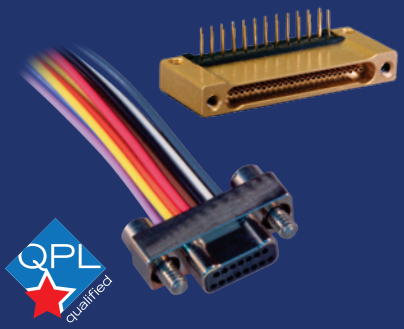

MIL-DTL-32139 Nanominiature Connectors
and Accessories

MIL-DTL-29504 Fiber Optic Termini and
AS39029 Electrical Contacts

© 2025 Glenair, Inc • 1211 Air Way, Glendale, CA 91201 • 818-247-6000 • www.glenair.com • U.S. CAGE code 06324

MIL-DTL-55116 Radio / Audio Connectors

807 NW Nett Warrior Qualified Tactical Connectors

STAR-PAN Power / Data Hubs and Tactical Cordsets

M85049 (AS85049) Backshells and Connector Accessories

MIL-DTL-83723 Backshells and Connector Accessories

M81511 (AS81511) Protective Covers and Connector Accessories

M85049/140 TACOM-Approved and Navy-Qualified 5617649 Shrink Boots

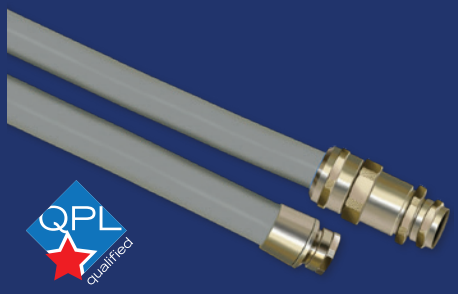

MIL-PRF-24758 NAVSEA-Qualified Conduit and Fittings

M85049 Composite Backshells and Covers for MIL-DTL-38999

GLENAIR'S COMMITMENT TO QUALITY

Glenair is proud of the quality and reliability we build into our broad range of mission-critical interconnect solutions—from discrete connectors to complex cable assemblies and embedded systems. Glenair is the biggest "made in the USA" interconnect supplier in the high-reliability industry, but we also operate factories in the UK, Italy, and Germany to serve the unique requirements of those markets. Glenair's Worldwide Quality System is ISO 9001 and AS9100 certified and registered. We also hold many discrete product and operations certifications for specialty, high-performance markets including space, nuclear power, and rail. In addition to world-class quality, we are laser-focused on customer service and committed to being the easiest manufacturer in our industry to do business with. Here are just some of our key customer service principles:

- **Lightning-fast turnarounds on quotes and special orders**
- **Worldwide sales and technical support in every major market**
- **Full-spectrum, "no gap" product lines**
- **No dollar or quantity minimums**
- **ISO 9001 and AS9100 certified**
- **Huge same-day shipment inventory**
- **Generous NRE, RMA, and sample request policies**
- **Abundant engineering and technical support**
- **No attitudinal constraints when it comes to customer convenience and service**

MISSION-CRITICAL

INTERCONNECT SOLUTIONS

3D Parts Models

3dparts.glenair.com

Glenair, Inc.
1211 Air Way • Glendale, California • 91201-2497
Telephone: 818-247-6000 • Fax: 818-500-9912
sales@glenair.com • **www.glenair.com**

Glenair East
20 Sterling Drive
Wallingford, CT
06492
Telephone: 203-741-1115
Fax: 203-741-0053
sales@glenair.com

Glenair UK Ltd
40 Lower Oakham Way
Oakham Business Park
Mansfield, Notts
NG18 5BY England
Telephone: +44-1623-638100
sales@glenair.co.uk

Glenair Microway Systems
7000 North Lawndale Avenue
Lincolnwood, IL
60712
Telephone: 847-679-8833
Fax: 847-679-8849

Glenair Nordic AB
Gustav III:s Boulevard 42
SE-169 27 Solna
Sweden
Telephone: +46-8-50550000
sales@glenair.se

Glenair GmbH
Schaberweg 28
61348 Bad Homburg
Germany
Telephone: 06172 / 68 16 0
Fax: 06172 / 68 16 90
info@glenair.de

Glenair Iberica S.L.
Av. De Manoteras, 24 – 2º
28050 Madrid
Spain
Telephone: +34 915 562 687
sales@glenair.es

Glenair Italia S.p.A.
Via Del Lavoro, 7
40057 Quarto Inferiore –
Granarolo dell'Emilia
Bologna, Italy
Telephone: +39-051-782811
Fax: +39-051-782259
info@glenair.it

Glenair France SARL
7, Avenue Parmentier
Immeuble Central Parc #2
31200 Toulouse
France
Telephone: +33-5-34-40-97-40
Fax: +33-5-61-47-86-10
sales@glenair.fr

Glenair Korea
6-21Tapsil-ro 58beon-gil
Giheung-gu, Yongin-si
Gyeonggi-do
Republic of Korea
Telephone: +82-07-5067-2437
Fax: +82-504-375-4549
sales@glenair.kr

Glenair Japan
40F, Nagoya Lucent Tower,
6-1, Ushijima-cho,
Nishi-ku, Nagoya, 451-6040
Japan
Telephone: +81-52-569-2521
Fax: +81-52-569-2523
sales@glenair.jp

© 2025 Glenair, Inc.

Printed in U.S.A.

CAT-182 • March 2025