About Amphenol® Aerospace

Your Source for Interconnect Products

Amphenol Aerospace

Amphenol Aerospace

CONTACT US:

Amphenol Aerospace
40-60 Delaware Avenue
Sidney, NY 13838-1395

Customer Service:
Mon - Fri 8AM - 5PM
Phone: (800) 678-0141
Fax: (607) 563-5157
Online: www.amphenol-aerospace.com

Amphenol Aerospace, Amphenol Commercial Air, and Amphenol Industrial Operations Main Facility in Sidney, NY USA

ABOUT AMPHENOL AEROSPACE:

Amphenol Aerospace, a Division of Amphenol Corporation, is one of the largest manufacturers of interconnect products in the world for the Military, Commercial Aerospace and Industrial markets. Amphenol designs, manufactures and markets circular and rectangular, electronic, fiber optic, EMI/EMP filter, and a variety of special applications connectors and interconnect systems.

Our state-of-the-art facility is nestled at the foothills of the Catskill Mountains in Sidney, NY. The Amphenol complex houses many technologies including CNC machining, die-casting, molding, impact and extruding, plating, screw machining and process controls. Our fully equipped material evaluation lab and engineering organization utilize the latest in computer aided design software and analysis tools, allowing us to design, test, and qualify advanced interconnect systems. Amphenol's interconnect products are supplied to thousands of OEMs worldwide and are supported by our worldwide sales and engineering force, including the largest global network of electronic distributors.

CARE

Customer-Centric:

Our **#1 priority** is our customers who deserve quality product on time.

Accountable:

Clear owners, clear actions, clear results.

Reliable:

What we build matters and quality is imperative.

Enthusiastic:

Challenges create rewarding opportunities. Enthusiasm is contagious and we will spread it.

QUALITY ASSURANCE:

Amphenol Aerospace has been awarded both AS9100 - Revision C and ISO9001:2008 Quality Assurance Certifications.

MIL-DTL-38999, Series I LJT, II JT, III TV, HD

Insert Availability and Identification Chart

Series JT II	Series LJT I	Series TV III	Military III	MIL-DTL-27599 JT/LJT Solder	Crimp	Hermetics Class H	Hermetics Class Y	Hermetics TV*	Service Rating	Total Contacts	■ 23 HD	22D	22M	22	20	16	12	12 (Coax)	10 (Power)	8 (Coax)	8†† (Twinax)
8-2■				P					M	2					2						
8-3■				X	NA	P	P		M	3					3						
	9-3■			X																	
		9-5★■							Grounded	1											1
8-6				X	X	P	P		M	6			6								
	9-6			X	X	P	P														
	9-7■			X					M	7			7								
		9-9■							N	9	9										
	9-22■			X					I	2					2						
8-35					X	P	P		M	6		6									
	9-35	9-35	A35		X	P	P	P													
8-44					X	P	P		M	4				4							
	9-44				X																
		9-94■			◆				M	2					2						
8-97■				X					M	4			2		2						
8-98				S	X	P	P		I	3					3						
	9-98	9-98	A98	X	X	P	P	P													
	11-2★	11-2★	B2		X	P**			I	2						2					
10-4					3				I	4					4						
	11-4	11-4		X	2																
10-5				X	X	P	P		I	5					5						
	11-5	11-5	B5	X	X			P													
	11-6■			S					I	6					6						
10-13				X	X	P/S	P/S		M	13			13								
	11-13			X	X	P/S	P/S														
		11-19■							N	19	19										
10-35					X	P/S	P/S		M	13		13									
	11-35	11-35	B35		X	P/S	P/S	P													
		11-54■			X ◆				II	4		4									
10-98				X	X	P/S	P/S		I	6					6						
	11-98	11-98	B98	X	X	P/S	P/S	P													
10-99					X	P	P		I	7					7						
	11-99	11-99	B99		X X			P													
12-3				X	X ◆	P	P		II	3						3					
	13-3■				P																
12-4				X	X	P	P		I	4						4					
	13-4★	13-4★	C4	X	X	P	P	P													
12-8				X	X	P	P		I	8					8						
	13-8	13-8	C8	X	X	P	P	P													
		13-13■							I, Fiber Optic	4						2**	2				
12-22					X	P/S	P/S		M	22			22								
	13-22			X	X	P/S	P/S														
		13-26■			2				M	8		6					2				
		13-32■							N	32	32										
12-35					X	P/S	P/S		M	22		22									
	13-35	13-35	C35		X	P/S	P/S	P													
		13-63■			◆				I	4						2	2				
12-98				X	X	P/S	P/S		I	10					10						
	13-98	13-98	C98	X	X	P/S	P/S	P													
		15-AT■			X				I	13		10					3				
14-4■					2				I	4							4				
	15-4■	15-4■			2 ◆																
14-5				X	X	P	P		II	5						5					
	15-5★	15-5★	D5	X	X	P	P	P													

X Completely tooled.
\+ Majority of tooling is completed (contact Amphenol Aerospace for availability).
◆ Not tooled for 02-R.
P Available with Pin contacts only
S Available with Socket contacts only
P/S Available with Pin contacts or Socket contacts
★ Ground plane proprietary option available. Arrg. 9-5 is exclusively ground plane type.
■ Not Mil-Qualified.
✧ 21-75 is Mil-Qualified with twinax contacts only. Note: MS connector 21-75 is supplied with size 8 twinax. Commercial connector 21-75 is supplied with size 8 coax.

■ **HD** designates High Density 38999 Series III insert patterns which use size 23 contacts only. Not rated over 175°C.
* Hermetic inserts - solder termination standard. (Contact Amphenol Aerospace for optional PCB or eyelet termination).
** Two size 16 contacts dedicated to fiber optics. See the Fiber Optic section for more information.
*** For use in MIL-STD-1760 applications (see pages 75 and 76).
† For RG 180/U and RG 195/U cables only.
†† Size 8 Coax and Twinax are interchangeable.
(2) Not Tooled for RP or 02RE
(3) Pin inserts only, not tooled for RP or 02RE (Consult Amphenol Aerospace for avail.)
(5) MS Connector 21-79 has provision for two size 8 coax contacts. Coax contacts are not supplied unless specified by customer.

MIL-DTL-38999, Series I LJT, II JT, III TV, HD

Insert Availability and Identification Chart

Amphenol Aerospace

Series	Series	Series	Military	MIL-DTL-27599		Hermetics					■ Contact Size										
JT II	LJT I	TV III	III	JT/LJT Solder	Crimp	Class H	Class Y	TV*	Service Rating	Total Contacts	23 HD	22D	22M	22	20	16	12	12 (Coax)	8 (Coax)	8†† (Twinax)	4
14-15				X	X	P	P		I	15					14	1					
	15-15	15-15	D15	X	X	P/S	P/S	P	I												
14-18				X	X	P/S	P/S		I	18					18						
	15-18	15-18	D18	X	X	P/S	P/S	P													
14-19■				X	X				I	19					19						
	15-19	15-19	D19		X	P	P	P													
14-35					X	P	P		M	37		37									
	15-35	15-35	D35		X	P/S	P/S	P													
14-37				X	X	P	P		M	37			37								
	15-37			X	X	P	P														
		15-55■							N	55	55										
14-68■					2	P	P		1	8						8					
	15-68■			X	X																
14-97					X	P	P		I	12					8	4					
	15-97	15-97	D97	X	X	P	P	P													
	17-2	17-2	E2		X ◆				M	39		38								1	
		17-EA■							M	19		10			3	2	4				
		17-EC■							M	41		32			9						
16-6					X	P	P		I	6							6				
	17-6	17-6	E6		X	P	P	P													
16-8				X	X	P	P		II	8						8					
	17-8★	17-8★	E8	X	X	P/S	P/S	P													
16-13■					2				I	13						13					
	17-13■				2																
	17-22■	17-22★■			◆				Coax	4								2	2		
	17-25■	17-25■			2				M	24		22							2		
16-26				X	X	P/S	P/S		I	26					26						
	17-26	17-26	E26	X	X	P/S	P/S	P													
16-35					X	P	P		M	55		55									
	17-35	17-35	E35	X	X	P	P	P													
16-42					X				M	42				42							
	17-42■				P																
		17-52■			X ◆				M	2										2	
16-55				X	X	P/S	P/S		M	55			55								
	17-55			X	X	P/S	P/S														
		17-60■			X				I/Coax	10		8							2		
		17-73■							N	73	73										
16-99				X	X	P	P		I	23					21	2					
	17-99	17-99	E99	X	X	P	P														
		19-AD■			X ◆				Inst.	17					16					1	
		19-FA■							M	23		6			8	7	2				
18-11				X	X	P	P		II	11						11					
	19-11★	19-11★	F11	X	X	P	P	P													
	19-18	19-18	F18		2 2				M	18		14								4	
18-28				X	X				I	28					26	2					
	19-28■	19-28	F28	X	P X																
18-30				X	X				I	30					29	1					
	19-30■			X	P																
		19-31■			X				M	15		12					1		2		
18-32				X	X	P/S	P/S		I	32					32						
	19-32	19-32	F32	X	X	P/S	P/S	P													
18-35					X	P	P		M	66		66									
	19-35	19-35	F35		X	P	P	P													
18-53				X	X				M	53				53							
	19-53■				P																
18-66				X	X	P	P		M	66			66								
	19-66				X	P	P														
	19-67■			X	3	S	S		M	67			67								
18-68■					2				I	18						18					
	19-68■	19-68■			3 S																
18-96■					2				I	9							9				
		19-88■							N	88	88										
20-1					X	P	P		M	79			79								
	21-1				X	P/S	P/S														

MIL-DTL-38999, Series I LJT, II JT, III TV, HD

Insert Availability and Identification Chart

Series JT II	Series LJT I	Series TV III	Military III	MIL-DTL-27599 JT/LJT Solder	Crimp		Hermetics H	Hermetics Y	Hermetics TV*	Service Rating	Total	■ Contact Size 23 HD	22D	22M	22	20	16	16 (Cx)	12	12 (Cx)	10 (Power)	8 (Power)	8 (Cx)	8†† (Twinax)	4
20-2					X					M	65				65										
	21-2■				X																				
20-11■					3					I	11								11						
	21-11★	21-11★	G11		X																				
20-16				X	X		P/S	P/S		II	16						16								
	21-16★	21-16★	G16	X	X		P	P	P																
	21-25■									I	25					25									
	21-27■			X						I	27					27									
		21-29			X					I	27					19	4		4						
20-35					X		P	P		M	79		79												
	21-35	21-35	G35		X		P/S	P/S	P																
20-39				X	X		P	P		I	39					37	2								
	21-39	21-39	G39	X	X		P	P	P																
20-41				X	X		P	P		I	41					41									
	21-41	21-41	G41	X	X		P/S	P/S	P																
		21-48■								M	4											4			
	21-75★	21-75★✧	G75		2	X				N M	4												4	(4)	
	21-79■	21-79■			2	X				II	19		17										2	(2)	
		21-121■								N	121	121													
22-1					X		P/S	P/S		M	100			100											
	23-1				X		P	P																	
22-2				X	X		P	P		M	85				85										
	23-2			X	X		P	P																	
	23-6★■	23-6★■		X	P					M	6													6	
22-14■					2	◆				I	14								14						
	23-14■	23-14■			2	◆																			
22-21				X	X		P	P		II	21						21								
	23-21★	23-21★	H21	X	X		P	P	P																
22-32				X	X		P	P		I	32					32									
	23-32■			X	P																				
	23-34■			X						I	34					34									
22-35					X		P/S	P/S		M	100		100												
	23-35	23-35	H35		X		P	P	P																
22-53■					P					I	53					53									
	23-53	23-53	H53	X	X		P/S	P/S	P																
		23-54 ■			X					M	53		40				9		4						
22-55				X	X		P	P		I	55					55									
	23-55	23-55	H55		X				P																
		23-63 ■			S					M	57		49					4		4					
	23-97■			X						II	16						16								
	23-99■			X						II	11						11								
		23-151 ■								N	151	151													
24-1					X		P	P		M	128			128											
	25-1				X		P	P																	
24-2					X					M	100				100										
	25-2				X																				
24-4					X		P	P		I	56					48	8								
	25-4	25-4	J4		X				P																
	25-7■	25-7	J7		X					M Twx	99		97										2		
		25-8★	J8		◆					Twinax	8													8	
		25-11***	J11		2	◆				N	11					2					9				
		25-16■								M	8					6									2
		25-17■			◆					M	42		36											6	
24-19■					X		P	P		I	19								19						
	25-19★	25-19★	J19		X				P																
	25-20■	25-20***	J20		2	◆				N	30					10	13			4				3	

X Completely tooled.
\+ Majority of tooling is completed (contact Amphenol Aerospace for availability).
◆ Not tooled for 02-R.
P Available with Pin contacts only
S Available with Socket contacts only
P/S Available with Pin contacts or Socket contacts
★ Ground plane proprietary option available. Arrg. 9-5, 26-62 is exclusively ground plane type.
■ Not Mil-Qualified.
✧ 21-75 is Mil-Qualified with twinax contacts only.
* Hermetic inserts - solder termination standard. (Contact Amphenol Aerospace for optional PCB or eyelet termination).

■ HD designates High Density 38999 Series III insert patterns which use size 23 contacts only. Not rated over 175°C.
** Two size 16 contacts dedicated to fiber optics. See the Fiber Optic Section for more information.
*** For use in MIL-STD-1760 applications (see pages 75 and 76).
† For RG 180/U and RG 195/U cables only.
†† Size 8 Coax and Twinax are interchangeable.
(2) Not Tooled for RP or 02RE
(3) Pin inserts only, not tooled for RP or 02RE (Consult Amphenol for avail.)
(4) MS connector 21-75 is supplied with size 8 twinax. Commercial connector 21-75 is supplied with size 8 coax.
(5) MS Connector 21-79 has provision for two size 8 coax contacts. Coax contacts are not supplied unless specified by customer.
(PWR) Suffix at end of part number to replace coax, twinax, and fiber contacts with power contacts.

MIL-DTL-38999, Series I LJT, II JT, III TV, HD

Insert Availability and Identification Chart

Amphenol Aerospace

Series	Series	Series	Military	MIL-DTL-27599		Hermetics					Contact Size											
JT II	LJT I	TV III	III	JT/LJT Solder	Crimp	H	Y	TV*	Service Rating	Total Contacts	23 HD	22D	20	16	12 (Fiber)	12	12 (Coax)	10	8 (Coax)	8†† (Twinax	8 Quadrax	4
24-24					X	P	P		I	24				12		12						
	25-24★	25-24★	J24		X	P	P															
		25-26■★			✦				I	25			16			5			4			
24-29					X				I	29				29								
	25-29★	25-29★	J29	X	X																	
24-35					X	P	P		New	128		128										
	25-35	25-35	J35		X	P	P	P	M													
24-37					X				I	37				37								
	25-37★	25-37★	J37		X																	
		25-41■							N Inst.	41		22	3	11			2			3		
24-43■					3				I	43			23	20								
	25-43	25-43	J43	X	2 ◆																	
	25-46	25-46	J46		2 ◆				I	46			40	4					2			
24-61				X	X	P	P		I	61			61									
	25-61	25-61	J61	X	X	P	P	P														
		25-62 ■★			X ◆				I	12				8							4	
		25-90	J90		◆				I	46			40	4						2		
		25-187 ■							N	187	187											
		25-1A ■							N	8				4								4
		25-AT ■			X				M	60		31	12	11	2		2			2		
		25-F4 ■			X				M/I	66		49		13		4						

TV SERIES III

SELECT SHELL SIZE - SPECIAL INSERT ARRANGEMENT

(Not Mil-Spec Qualified)

Shell Size-Insert Arrg.	Crimp	Hermetics*	Service Rating	Total Contacts	Comments	Contact Size 22D	20	16	12
9-2	X		I	2	Formerly Pyle		2		
15-4	X		II	4	Formerly Pyle			4	
15-25	X		M	25	Formerly Pyle	22		3	
17-20	X		M	20	Formerly Pyle	16			4
21-12	X		I	12	Formerly Pyle		3		9
21-21	X		M/Inst.	41	Improved sealing	32			9
21-99	X		M	16	Formerly Pyle	5			11
25-92	X		M	101	Formerly Pyle	92		9	
25-97	X		M	42	Formerly Pyle	26		3	13

LJT SERIES I

SELECT SHELL SIZE - SPECIAL INSERT ARRANGEMENT

(Not Mil-Spec Qualified)

Shell Size-Insert Arrg.	Crimp	Service Rating	Total Contacts	Comments	Contact Size 22D	20	16	12
25-64	X		64	Formerly Pyle	40	8	10	6

SELECT NON-STANDARD SHELL SIZE

- Special Insert Arrangement

Shell Size-Insert Arrg.	Crimp	Hermetics*	Service Rating	Total Con-tacts	Contact Size 22D	20	8	4	0
25L-3	X		II	3			1	2	
25L-7	X		II	7			7		
33-3	X		II	3				1	2
33-5	X		II	5				5	
33-6	X		II	6			2	4	
37-5	X		II	4					4

(Insert arrangements requiring non-standard shells)

X Completely tooled.
\+ Majority of tooling is completed (contact Amphenol Aerospace for availability).
◆ Not tooled for 02-R.
P Pin inserts only (contact Amphenol Aerospace for socket availability).
★ Ground plane proprietary option available. Arrangement 9-5, 25-62 is exclusively ground plane type.
■ Not Mil-Qualified.
* Hermetic inserts - solder termination standard. (Contact Amphenol Aerospace for optional PCB or eyelet termination).
** Two size 16 contacts dedicated to fiber optics. See the Fiber Optic section for more information.
*** For use in MIL-STD-1760 applications (pgs. 75 and 76).
† For RG 180/U and RG 195/U cables only.
†† Size 8 Coax and Twinax are interchangeable.
Note: 25L-3 and 25L-7 use longer shells.
(PWR) Suffix at end of part number to replace coax, twinax, and fiber contacts with power contacts.

MIL-DTL-38999, Series I LJT, II JT, III TV, HD

Insert Arrangements

Front face of pin inserts illustrated

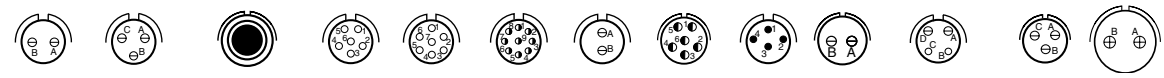

Shell Size & Insert Arrg. for:													
Series II JT	8-2	8-3		8-6				8-35	8-44		8-97	8-98	
Series I LJT		9-3		9-6	9-7		9-22	9-35	9-44			9-98	11-2
Series III TV			9-5			9-9 HD		9-35		9-94		9-98	11-2
Service Rating	M	M	Grounded	M	M	N	I	M	M	M	M	I	I
Number of Contacts	2	3	1	6	7	9	2	6	4	2	2 2	3	2
Contact Size	20	20	8 Twinax	22M	22M	23	20	22D	22	20	22M 20	20	16

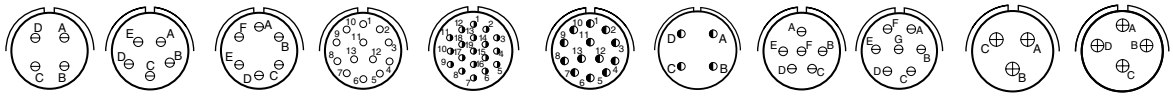

Shell Size & Insert Arrg. for:											
Series II JT	10-4	10-5		10-13		10-35		10-98	10-99	12-3	12-4
Series I LJT	11-4	11-5	11-6	11-13		11-35		11-98	11-99	13-3	13-4
Series III TV	11-4	11-5			11-19 HD	11-35	11-54	11-98	11-99		13-4
Service Rating	I	I	I	M	N	M	II	I	I	II	I
Number of Contacts	4	5	6	13	19	13	4	6	7	3	4
Contact Size	20	20	20	22M	23	22D	22D	20	20	16	16

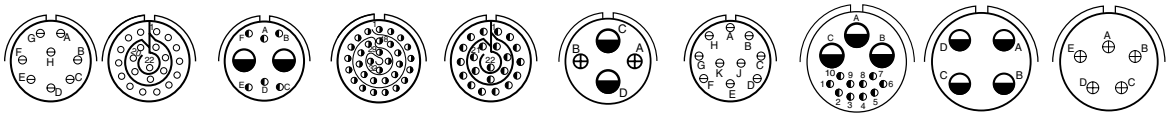

Shell Size & Insert Arrg. for:										
Series II JT	12-8	12-22			12-35		12-98		14-4	14-5
Series I LJT	13-8	13-22			13-35		13-98		15-4	15-5
Series III TV	13-8		13-26	13-32 HD	13-35	13-63	13-98	15-AT	15-4	15-5
Service Rating	I	M	M	N	M	I	I	I	I	II
Number of Contacts	8	22	6 2	32	22	2 2	10	10 3	4	5
Contact Size	20	22M	22D 12	23	22D	16 12	20	22D 12	12	16

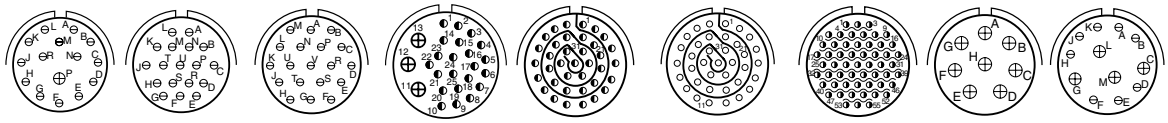

Shell Size & Insert Arrg. for:									
Series II JT	14-15	14-18	14-19		14-35	14-37		14-68	14-97
Series I LJT	15-15	15-18	15-19		15-35	15-37		15-68	15-97
Series III TV	15-15	15-18	15-19	15-25	15-35		15-55 HD		15-97
Service Rating	I	I	I	M	M	M	N	I	I
Number of Contacts	14 1	18	19	22 3	37	37	55	8	8 4
Contact Size	20 16	20	20	22D 16	22D	22M	23	16	20 16

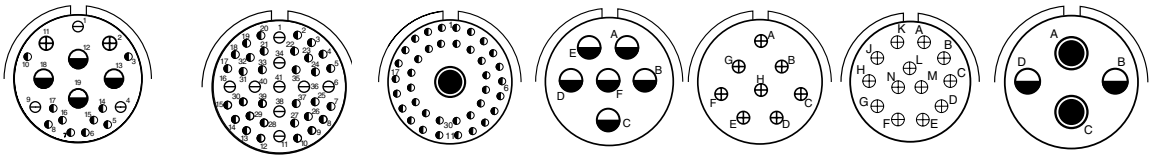

Shell Size & Insert Arrg. for:									
Series II JT					16-6	16-8	16-13		
Series I LJT				17-2	17-6	17-8	17-13	17-22	
Series III TV	17-EA		17-EC	17-2	17-6	17-8		17-22	
Service Rating				M	I	II	I	Coax	
Number of Contacts	10 3 2 4		32 9	38 1	6	8	13	2 2	
Contact Size	22D 20 16 12		22D 20	22D 8 Twinax	12	16	16	12 Coax 8 Coax	

HD: High Density HD38999 (use size 23 contacts only)

CONTACT LEGEND 8 10 12 16 20 22 22M 22D 23

MIL-DTL-38999, Series I LJT, II JT, III TV, HD

Insert Arrangements

Amphenol Aerospace

Front face of pin inserts illustrated

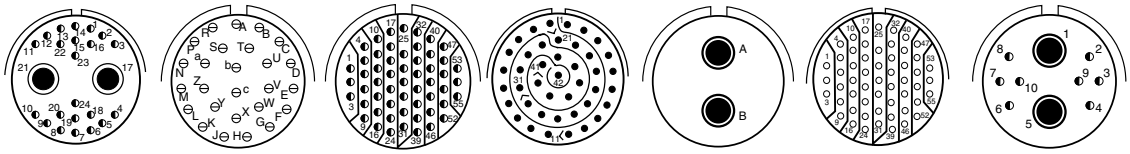

Shell Size & Insert Arrg. for:							
Series II JT		16-26	16-35	16-42		16-55	
Series I LJT	17-25	17-26	17-35	17-42		17-55	
Series III TV		17-26	17-35		17-52		17-60
Service Rating	M	I	M	M	M	M	I/Coax
Number of Contacts	22 2	26	55	42	2	55	8 2
Contact Size	22D 8 Coax	20	22D	22	8 Twinax	22M	22D 8 Coax

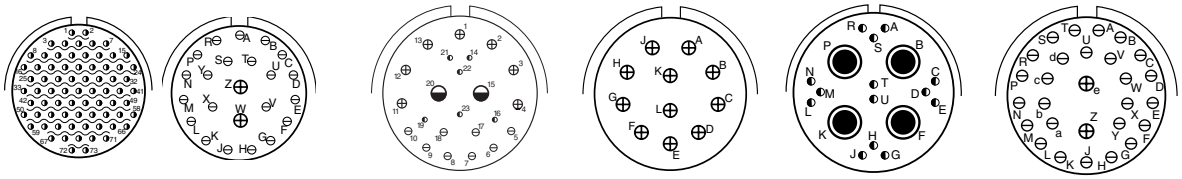

Shell Size & Insert Arrg. for:						
Series II JT		16-99		18-11		18-28
Series I LJT		17-99		19-11	19-18	19-28
Series III TV	17-73 HD	17-99	19-FA	19-11	19-18	19-28
Service Rating	N	I	M	II	M	M
Number of Contacts	73	21 2	6 8 7 2	11	14 4	26 2
Contact Size	23	20 16	22D 20 16 12	16	22D 8 Twinax	20 16

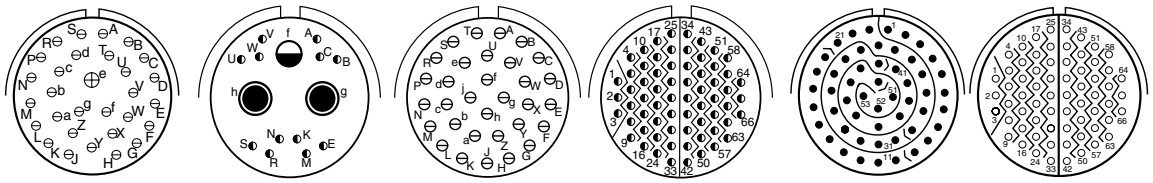

Shell Size & Insert Arrg. for:						
Series II JT	18-30		18-32	18-35	18-53	18-66
Series I LJT	19-30		19-32	19-35	19-53	19-66
Series III TV		19-31	19-32	19-35		
Service Rating	I	M	1	M	M	M
Number of Contacts	29 1	2 1 12	32	66	53	66
Contact Size	20 16	8 Coax 12 22D	20	22D	22	22M

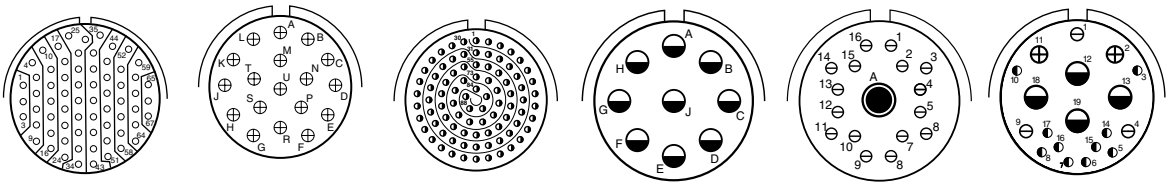

Shell Size & Insert Arrg. for:						
Series II JT		18-68		18-96		
Series I LJT	19-67	19-68				
Series III TV			19-88 HD		19-AD	19-FA
Service Rating	M	I	N	I	Inst.	M
Number of Contacts	67	18	88	9	16 1	6 8 7 2
Contact Size	22M	16	23	12	20 8 Twinax	22D 20 16 12

CONTACT LEGEND 8 10 12 16 20 22 22M 22D 23

HD: High Density HD38999 (use size 23 contacts only)

MIL-DTL-38999, Series I LJT, II JT, III TV, HD

Insert Arrangements

Front face of pin inserts illustrated

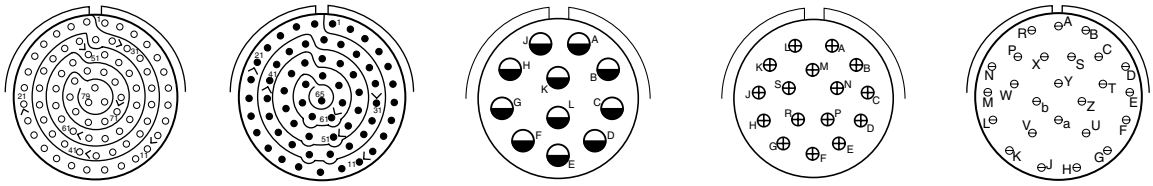

Shell Size & Insert Arrg. for:					
Series II JT	20-1	20-2	20-11	20-16	
Series I LJT	21-1	21-2	21-11	21-16	21-25
Series III TV			21-11	21-16	
Service Rating	M	II	I	II	I
Number of Contacts	79	65	11	16	25
Contact Size	22M	22	12	16	20

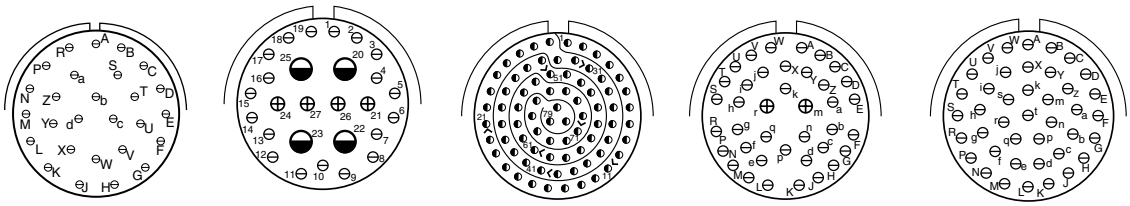

Shell Size & Insert Arrg. for:								
Series II JT					20-35	20-39		20-41
Series I LJT	21-27				21-35	21-39		21-41
Series III TV			21-29		21-35	21-39		21-41
Service Rating	I		I		M	1		I
Number of Contacts	27	19	4	4	79	37	2	41
Contact Size	20	20	16	12	22D	20	16	20

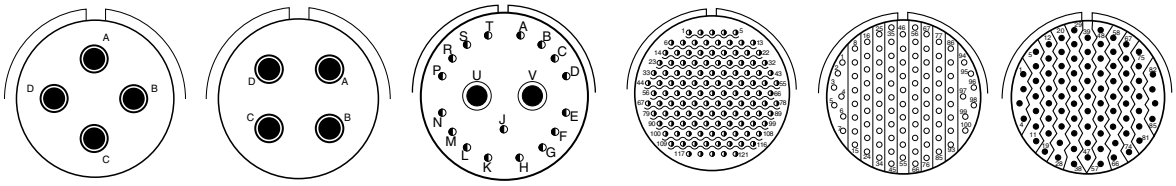

Shell Size & Insert Arrg. for:						
Series II JT					22-1	22-2
Series I LJT		21-75	21-79		23-1	23-2
Series III TV	21-48	21-75	21-79	21-121 HD		
Service Rating	M	N	II	N	M	M
Number of Contacts	4	4	17 (See Note)	121	100	85
Contact Size	8 power	(See Note)	22D	23	22M	22

HD: High Density HD38999 (use size 23 contacts only)
Note: MS connector 21-75 is supplied with four size 8 twinax contacts.
Commercial connector 21-75 is supplied with four size 8 coax contacts.
MS connector 21-79 has provision for two size 8 coax contacts.
Coax contacts are not supplied unless specified by customers.

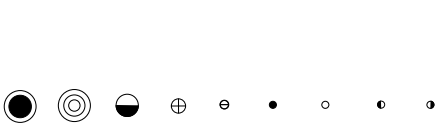

CONTACT LEGEND 8 10 12 16 20 22 22M 22D 23

Insert Arrangements

Front face of pin inserts illustrated

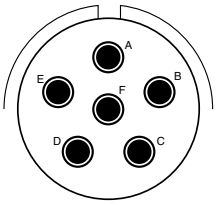
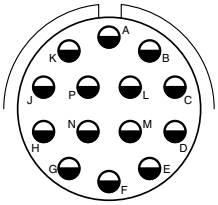
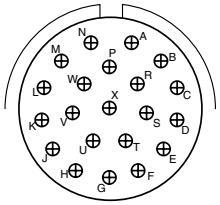
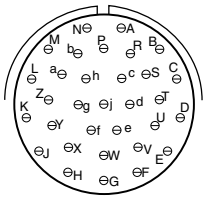
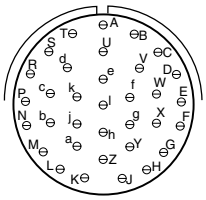

Shell Size & Insert Arrg. for:					
Series II JT		22-14	22-21	22-32	
Series I LJT	23-6	23-14	23-21	23-32	23-34
Series III TV	23-6		23-21		
Service Rating	M	I	II	I	I
Number of Contacts	6	14	21	32	34
Contact Size	8 Twinax	12	16	20	20

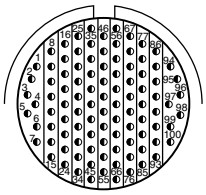
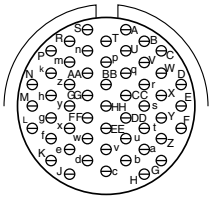
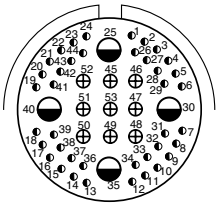
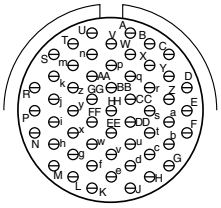
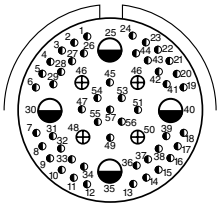

Shell Size & Insert Arrg. for:					
Series II JT	22-35	22-53		22-55	
Series I LJT	23-35	23-53		23-55	
Series III TV	23-35	23-53	23-54	23-55	23-63
Service Rating	M	I	M	I	M
Number of Contacts	100	53	40 9 4	55	49 4 4
Contact Size	22D	20	22D 16 12	20	22D 16 12
					Coax Coax

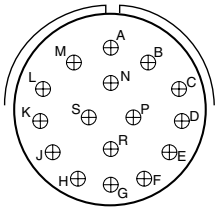
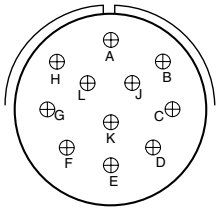
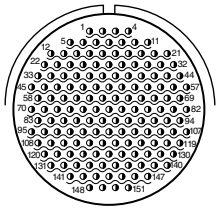
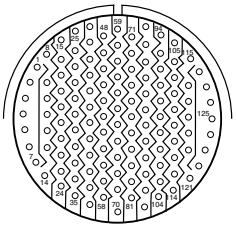
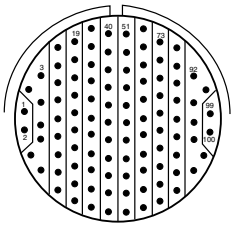

Shell Size & Insert Arrg. for:					
Series II JT				24-1	24-2
Series I LJT	23-97	23-99		25-1	25-2
Series III TV			23-151 HD		
Service Rating	II	II	N	M	M
Number of Contacts	16	11	151	128	100
Contact Size	16	16	23	22M	22

CONTACT LEGEND	8	10	12	16	20	22	22M	22D	23

HD: High Density HD38999 (use size 23 contacts only)

MIL-DTL-38999, Series I LJT, II JT, III TV

Insert Arrangements

Front face of pin inserts illustrated

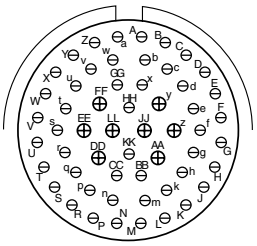
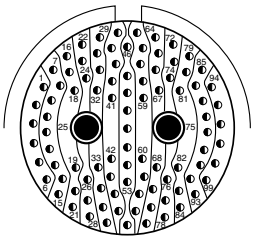
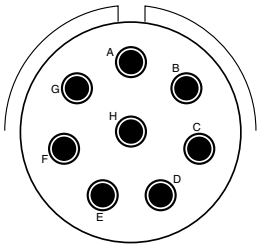
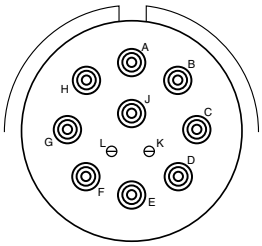

Shell Size & Insert Arrg. for:								
Series II JT	24-4							
Series I LJT	25-4		25-7			25-11		
Series III TV	25-4		25-7		25-8	25-11***		
Service Rating	I		M		Twinax	N		
Number of Contacts	48	8	97	2	8	2	9	
Contact Size	20	16	22D	8 Twinax	8 Twinax	20	10	

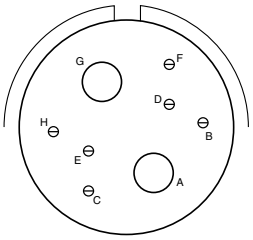
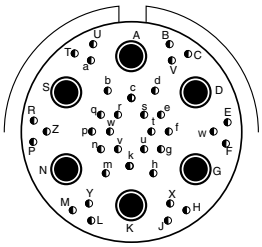
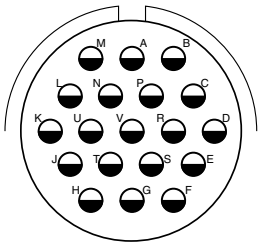
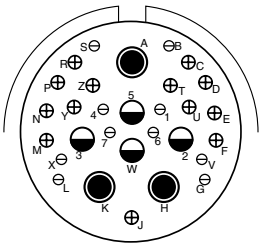

Shell Size & Insert Arrg. for:									
Series II JT					24-19				
Series I LJT					25-19	25-20			
Series III TV	25-16		25-17		25-19	25-20***			
Service Rating	M		M		I	N			
Number of Contacts	6	2	36	6	19	10	13	3	4
Contact Size	20	4	22D	8 Twinax	12	20	16	8 Twinax	12 Coax (With Matched Impedance)

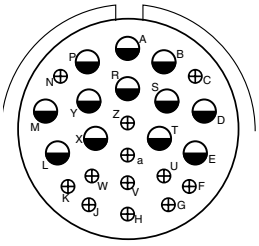
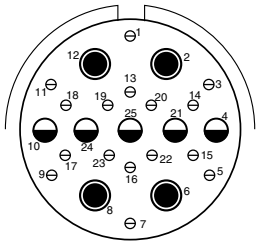
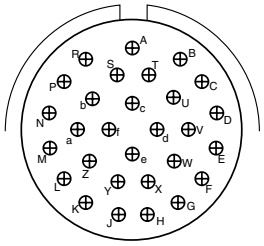
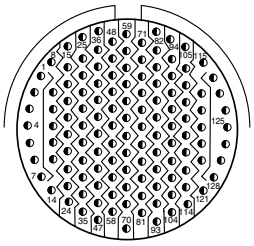

Shell Size & Insert Arrg. for:								
Series II JT	24-24					24-29	24-35	
Series I LJT	25-24					25-29	25-35	
Series III TV	25-24		25-26			25-29	25-35	
Service Rating	I		I			I	M	
Number of Contacts	12	12	16	5	4	29	128	
Contact Size	16	12	20	12	8 Coax	16	22D	

*** For use in MIL-STD-1760 applications (see pages 75 and 76).

CONTACT LEGEND	8	10	12	16	20	22	22M	22D	23

Amphenol Aerospace

Insert Arrangements

Front face of pin inserts illustrated

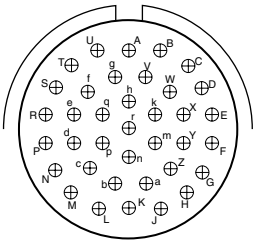
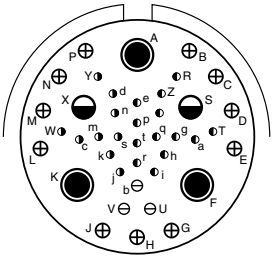
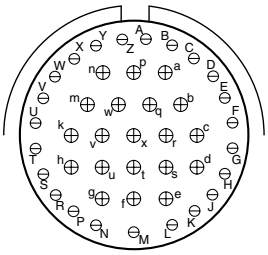

Shell Size & Insert Arrg. for:								
Series II JT	24-37						25-43	
Series I LJT	25-37						25-43	
Series III TV	25-37	25-41					25-43	
Service Rating	I	N/Inst.					I	
Number of Contacts	37	22	3	11	2	3	23	20
Contact Size	16	22D	20	16	12 Coax	8 Twinax	20	16

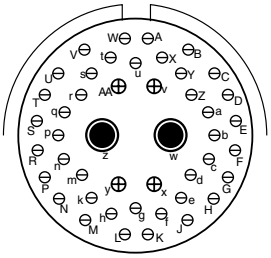
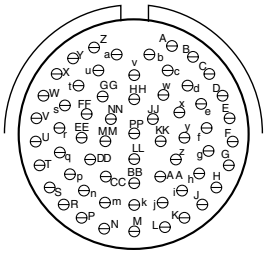
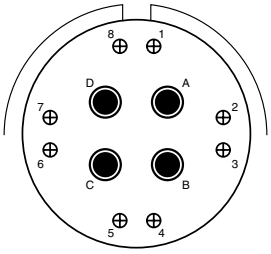
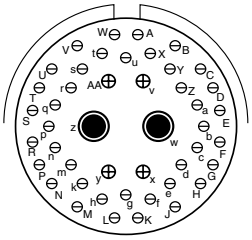

Shell Size & Insert Arrg. for:									
Series II JT				24-61					
Series I LJT	25-46			25-61					
Series III TV	25-46			25-61	25-62		25-90		
Service Rating	I			I	I		I		
Number of Contacts	40	4	2	61	8	4	40	4	2
Contact Size	20	16	8 Coax †	20	16	8	20	16	8 Twinax
					Ground Plane Only				

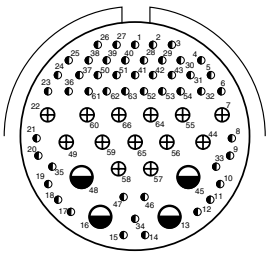
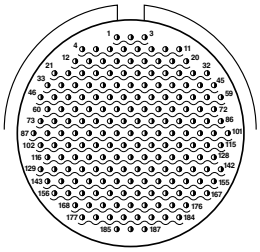
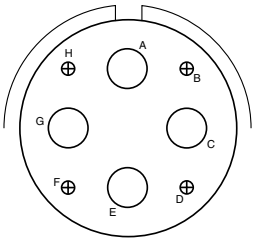
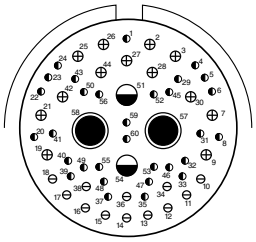

Shell Size & Insert Arrg. for:										
Series II JT										
Series I LJT										
Series III TV	25-F4			25-187 HD	25-1A		25-AT			
Service Rating	Size 22D=M, Balance =I			N	N		N			
Number of Contacts	49	13	4	187	4	4	2	2	13	12	31
Contact Size	22D	16	12	23	16	4	10	12	16	20	22D

† Coax contacts for RG180/U or RG195/U cable.

HD: High Density HD38999 (use size 23 contacts only)

CONTACT LEGEND	8	10	12	16	20	22	22M	22D	23

MIL-DTL-38999, Series III TV

Special Insert Arrangements

Front face of pin inserts illustrated

Shell Size & Insert Arrg. for:

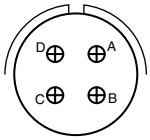

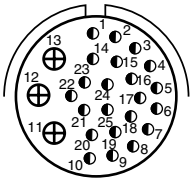

Series III TV	9-2	15-4*	15-25	
Service Rating	I	II	M	
Number of Contacts	2	4	22	3
Contact Size	20	16	22D	16

Shell Size & Insert Arrg. for:

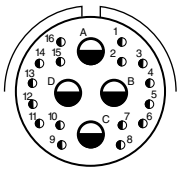

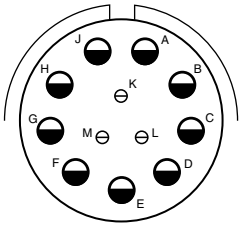

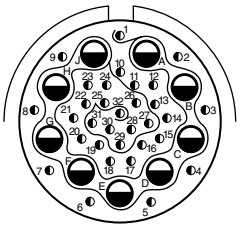

Series III TV	17-20		21-12		21-21	
Service Rating	M		I		M/Inst.	
Number of Contacts	16	4	3	9	32	9
Contact Size	22D	12	20	12	22D	12

Shell Size & Insert Arrg. for:

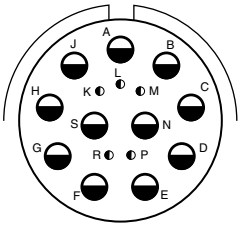

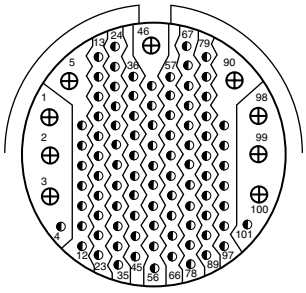

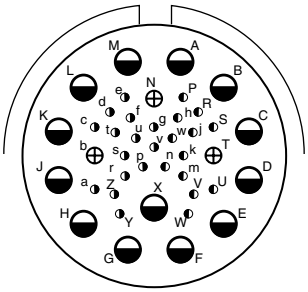

Series III TV	21-99		25-92		25-97		
Service Rating	M		M		M		
Number of Contacts	5	11	92	9	26	3	13
Contact Size	22D	12	22D	16	22D	16	12

NOTE: Some specials shown here were formerly known as Pyle arrangements.
Consult Amphenol for how to order information for connectors with these inserts.
For further information on special arrangements consult Amphenol Aerospace, Sidney NY.
* Pyle 15-4 does not mate with Amphenol Tri-Start 15-4 insert.

CONTACT LEGEND 8 10 12 16 20 22 22M 22D 23*

Special Insert Arrangements

Amphenol Aerospace

Non-Standard Shells or Large Contacts

Front face of pin inserts illustrated

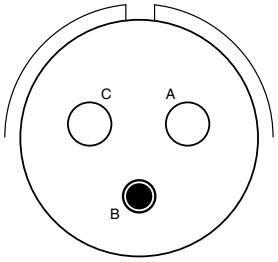

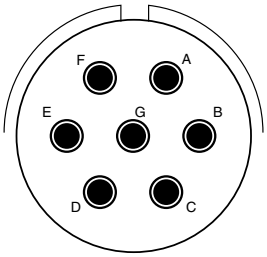

Shell Size & Insert Arrg. for:

Series III TV	25L-3		25L-7
Service Rating	II		II
Number of Contacts	1	2	7
Contact Size	8	4	8

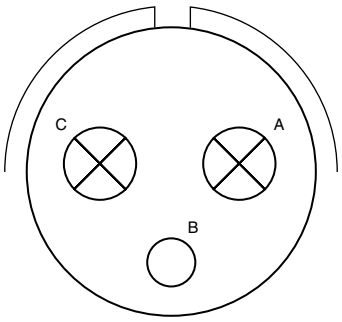

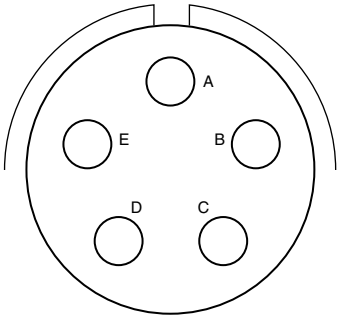

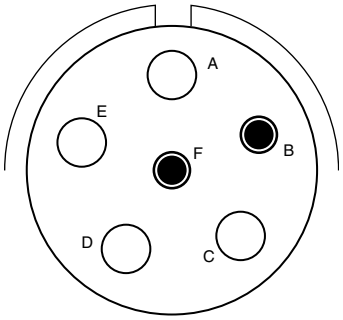

Shell Size & Insert Arrg. for:

Series III TV	33-3		33-5	33-6	
Service Rating	II		II	II	
Number of Contacts	1	2	5	2	4
Contact Size	4	0	4	8	4

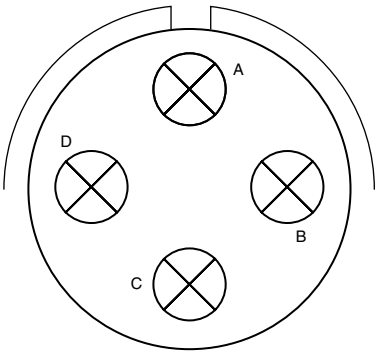

Shell Size & Insert Arrg. for:

Series III TV	37-5
Service Rating	II
Number of Contacts	4
Contact Size	0

NOTE: Some specials shown here were formerly known as Pyle arrangements. Consult Amphenol for how to order information for connectors with these inserts.
Consult Amphenol Aerospace for longer shell drawings.

CONTACT LEGEND

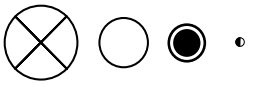

PCB Contacts 38999, Series I LJT, II JT, III TV

Insert Arrangements

INSERT ARRANGEMENT #8-3 / 9-3

Connector Type:	JT MIL-DTL-38999 Series II	LJT MIL-DTL-38999 Series I	Tri-Start MIL-DTL-38999 Series III	Number of Contacts	Contact Size	Service Rating
Insert Designation:	8-3	9-3	NA	3	20	M

Contact Locations
Front face of pin insert shown

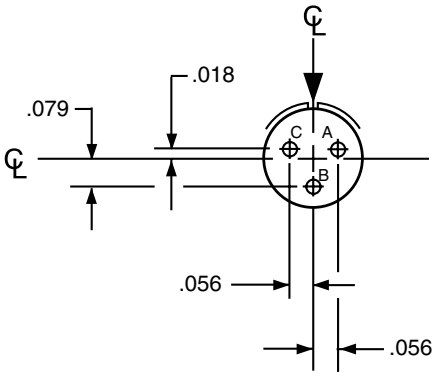

*Service Rating: M for MIL-DTL-38999

INSERT ARRANGEMENT #8-35 / 9-35

Connector Type:	JT MIL-DTL-38999 Series II	LJT MIL-DTL-38999 Series I	Tri-Start MIL-DTL-38999 Series III	Number of Contacts	Contact Size	Service Rating
Insert Designation:	8-35	9-35	9-35	6	22D	M

Contact Locations
Front face of pin insert shown

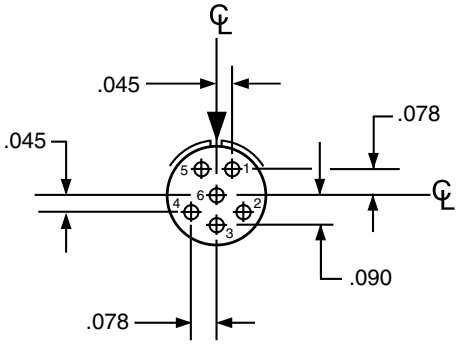

All dimensions for reference only. For alternate rotations see page 46 for Series III, page 86 for Series II, and page 114 for Series I.
Note: Shown in this catalog are the most common insert patterns for PCB applications. For availability of other arrangements, consult Amphenol Aerospace.

Amphenol Aerospace

Insert Arrangements

INSERT ARRANGEMENT #8-98 / 9-98

Connector Type:	JT MIL-DTL-38999 Series II	LJT MIL-DTL-38999 Series I	Tri-Start MIL-DTL-38999 Series III	Number of Contacts	Contact Size	Service Rating
Insert Designation:	8-98	9-98	9-98	3	20	I

Contact Locations

Front face of pin insert shown

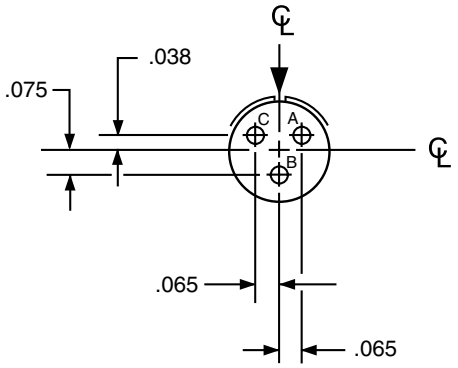

INSERT ARRANGEMENT #10-5 / 11-5

Connector Type:	JT MIL-DTL-38999 Series II	LJT MIL-DTL-38999 Series I	Tri-Start MIL-DTL-38999 Series III	Number of Contacts	Contact Size	Service Rating
Insert Designation:	10-5	11-5	11-5	5	20	I

Contact Locations

Front face of pin insert shown

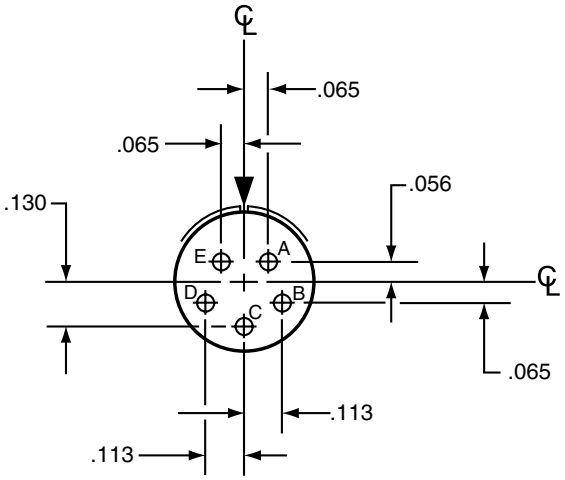

All dimensions for reference only. For alternate rotations see page 46 Series III, page 86 Series II, and page 114 Series I.

Note: Shown in this catalog are the most common insert patterns for PCB applications. For availability of other arrangements, consult Amphenol Aerospace.

PCB Contacts 38999, Series I LJT, II JT, III TV

Insert Arrangements

INSERT ARRANGEMENT #10-6 / 11-6

Connector Type:	JT MIL-DTL-38999 Series II	LJT MIL-DTL-38999 Series I	Tri-Start MIL-DTL-38999 Series III	Number of Contacts	Contact Size	Service Rating
Insert Designation:	NA	11-6	NA	6	20	I

Contact Locations
Front face of pin insert shown

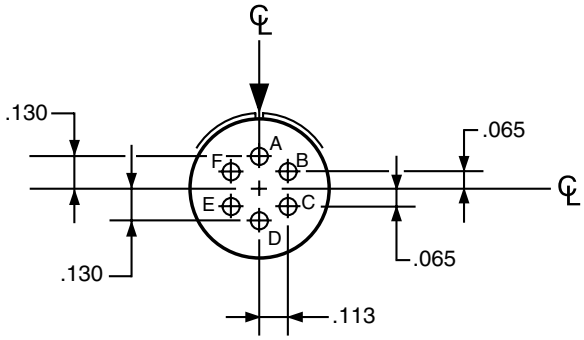

INSERT ARRANGEMENT #10-35 / 11-35

Connector Type:	JT MIL-DTL-38999 Series II	LJT MIL-DTL-38999 Series I	Tri-Start MIL-DTL-38999 Series III	Number of Contacts	Contact Size	Service Rating
Insert Designation:	10-35	11-35	11-35	13	22D	M

Contact Locations
Front face of pin insert shown

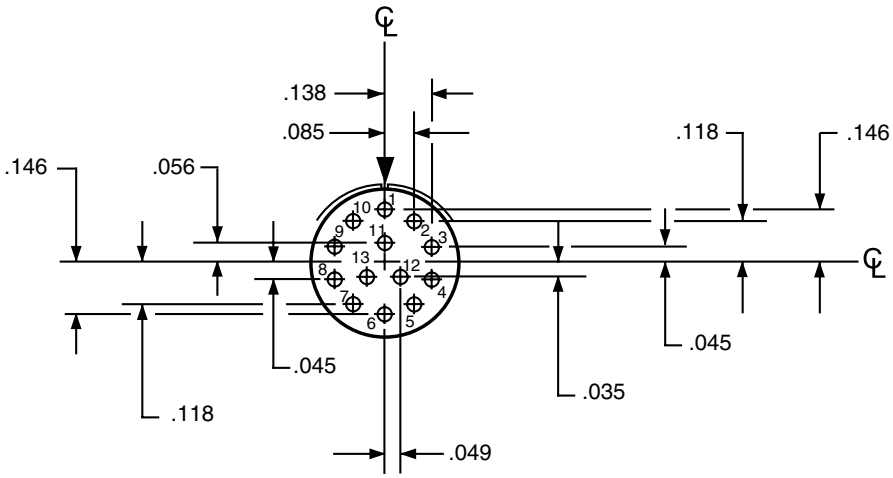

All dimensions for reference only. For alternate rotations see page 46 for Series III, page 86 for Series II, and page 114 for Series I.
Note: Shown in this catalog are the most common insert patterns for PCB applications. For availability of other arrangements, consult Amphenol Aerospace.

Amphenol Aerospace

Insert Arrangements

INSERT ARRANGEMENT #12-3 / 13-3

Connector Type:	JT MIL-DTL-38999 Series II	LJT MIL-DTL-38999 Series I	Tri-Start MIL-DTL-38999 Series III	Number of Contacts	Contact Size	Service Rating
Insert Designation:	12-3	13-3	NA	3	16	II

Contact Locations

Front face of pin insert shown

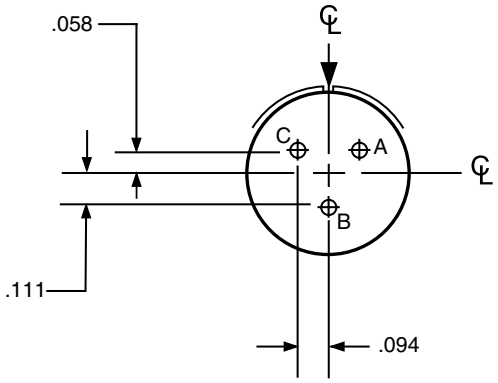

INSERT ARRANGEMENT #12-35 / 13-35

Connector Type:	JT MIL-DTL-38999 Series II	LJT MIL-DTL-38999 Series I	Tri-Start MIL-DTL-38999 Series III	Number of Contacts	Contact Size	Service Rating
Insert Designation:	12-35	13-35	13-35	22	22D	M

Contact Locations

Front face of pin insert shown

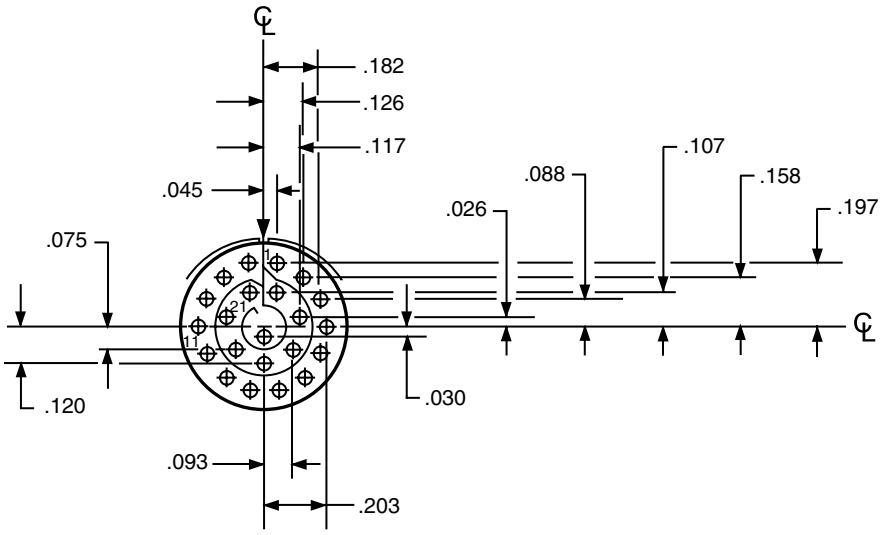

All dimensions for reference only. For alternate rotations see page 46 for Series III, page 86 for Series II, and page 114 for Series I.
Note: Shown in this catalog are the most common insert patterns for PCB applications. For availability of other arrangements, consult Amphenol Aerospace.

PCB Contacts 38999, Series I LJT, II JT, III TV

Insert Arrangements

INSERT ARRANGEMENT #14-18 / 15-18

Connector Type:	JT MIL-DTL-38999 Series II	LJT MIL-DTL-38999 Series I	Tri-Start MIL-DTL-38999 Series III
Insert Designation:	14-18	15-18	15-18

Number of Contacts	Contact Size	Service Rating
18	20	I

Contact Locations

Front face of pin insert shown

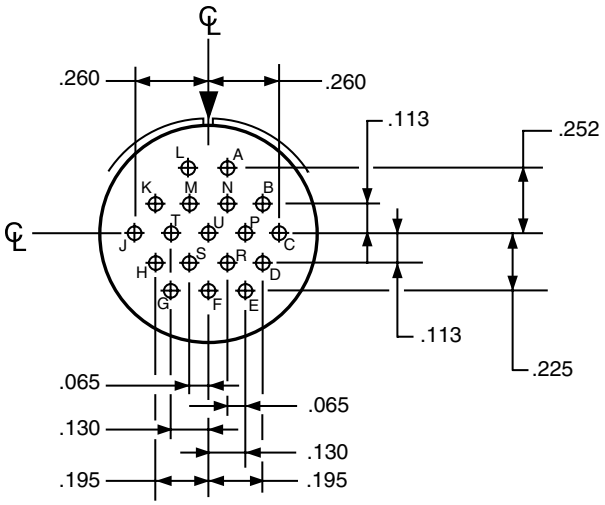

INSERT ARRANGEMENT #14-19 / 15-19

Connector Type:	JT MIL-DTL-38999 Series II	LJT MIL-DTL-38999 Series I	Tri-Start MIL-DTL-38999 Series III
Insert Designation:	14-19	15-19	15-19

Number of Contacts	Contact Size	Service Rating
19	20	I

Contact Locations

Front face of pin insert shown

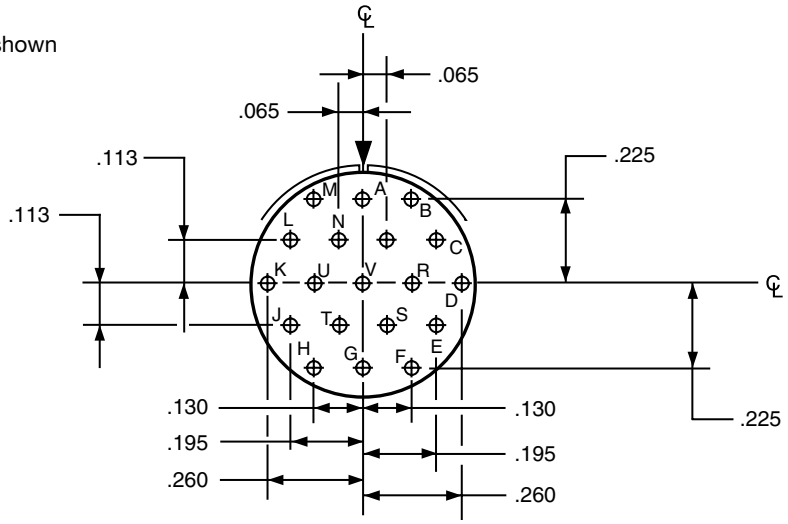

All dimensions for reference only. For alternate rotations see page 46 for Series III, page 86 for Series II, and page 114 for Series I.
Note: Shown in this catalog are the most common insert patterns for PCB applications. For availability of other arrangements, consult Amphenol Aerospace.

Amphenol Aerospace

Insert Arrangements

INSERT ARRANGEMENT #14-35 / 15-35

Connector Type:	JT MIL-DTL-38999 Series II	LJT MIL-DTL-38999 Series I	Tri-Start MIL-DTL-38999 Series III	Number of Contacts	Contact Size	Service Rating
Insert Designation:	14-35	15-35	15-35	37	22D	M

Contact Locations
Front face of pin insert shown

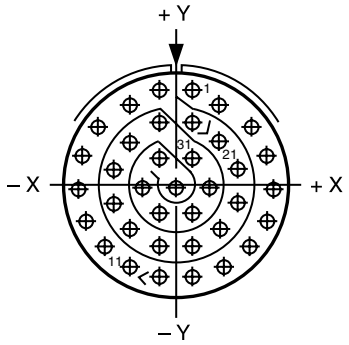

Contact Hole Locations			Contact Hole Locations		
Contact Number	Location X Axis	Location Y Axis	Contact Number	Location X Axis	Location Y Axis
1	+.045	+.262	19	+.045	+.172
2	+.123	+.217	20	+.123	+.119
3	+.211	+.160	21	+.170	+.040
4	+.254	+.080	22	+.170	–.050
5	+.266	–.010	23	+.123	–.127
6	+.247	–.098	24	+.045	–.172
7	+.200	–.175	25	–.045	–.172
8	+.130	–.232	26	–.123	–.127
9	+.045	–.262	27	–.170	–.050
10	–.045	–.262	28	–.170	+.040
11	–.130	–.232	29	–.123	+.119
12	–.200	–.175	30	–.045	+.172
13	–.247	–.098	31	+.045	+.074
14	–.266	–.010	32	+.090	–.004
15	–.254	+.080	33	+.045	–.082
16	–.211	+.160	34	–.045	–.082
17	–.123	+.217	35	–.090	–.004
18	–.045	+.262	36	–.045	+.074
			37	.000	–.004

INSERT ARRANGEMENT #16-26 / 17-26

Connector Type:	JT MIL-DTL-38999 Series II	LJT MIL-DTL-38999 Series I	Tri-Start MIL-DTL-38999 Series III	Number of Contacts	Contact Size	Service Rating
Insert Designation:	NA	17-26	17-26	26	20	I

Contact Locations
Front face of pin insert shown

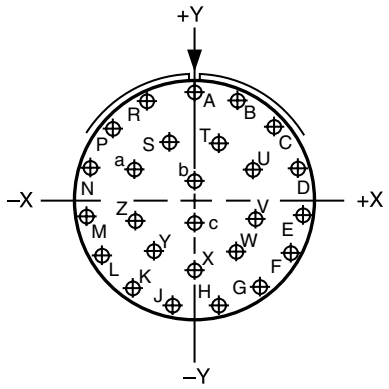

Contact Hole Locations			Contact Hole Locations		
Contact Number	Location X Axis	Location Y Axis	Contact Number	Location X Axis	Location Y Axis
A	.000	+.321	R	–.131	+.293
B	+.131	+.293	S	–.070	+.177
C	+.239	+.214	T	+.070	+.177
D	+.305	+.099	U	+.175	+.094
E	+.319	–.034	V	+.178	–.036
F	+.278	–.161	W	+.119	–.151
G	+.189	–.260	X	.000	–.203
H	+.067	–.314	Y	–.119	–.151
J	–.067	–.314	Z	–.178	–.036
K	–.189	–.260	a	–.175	+.094
L	–.278	–.161	b	.000	+.065
M	–.319	–.034	c	.000	–.065
N	–.305	+.099			
P	–.239	+.214			

All dimensions for reference only. For alternate rotations see page 46 for Series III, page 86 for Series II, and page 114 for Series I.
Note: Shown in this catalog are the most common insert patterns for PCB applications.
For availability of other arrangements, consult Amphenol Aerospace.

PCB Contacts 38999, Series I LJT, II JT, III TV

Insert Arrangements

INSERT ARRANGEMENT #16-35 / 17-35

Connector Type:	JT MIL-DTL-38999 Series II	LJT MIL-DTL-38999 Series I	Tri-Start MIL-DTL-38999 Series III
Insert Designation:	16-35	17-35	17-35

Number of Contacts	Contact Size	Service Rating
55	22D	M

Contact Locations

Front face of pin insert shown

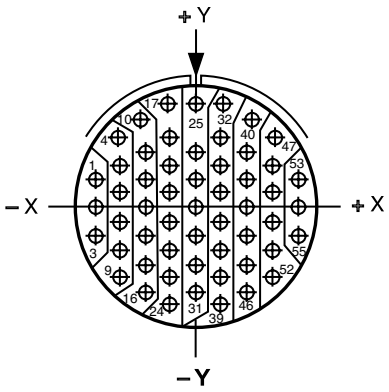

Contact Hole Locations		
Contact Number	Location X Axis	Location Y Axis
1	–.312	+.086
2	–.312	–.004
3	–.312	–.094
4	–.242	+.221
5	–.234	+.131
6	–.234	+.041
7	–.234	–.049
8	–.234	–.139
9	–.234	–.229
10	–.172	+.279
11	–.156	+.176
12	–.156	+.086
13	–.156	–.004
14	–.156	–.094
15	–.156	–.184
16	–.156	–.274
17	–.089	+.316
18	–.078	+.221
19	–.078	+.131
20	–.078	+.041
21	–.078	–.049
22	–.078	–.139
23	–.078	–.229
24	–.078	–.319
25	.000	+.329
26	.000	+.176
27	.000	+.086

Contact Hole Locations		
Contact Number	Location X Axis	Location Y Axis
28	.000	–.004
29	.000	–.094
30	.000	–.184
31	.000	–.274
32	+.089	+.316
33	+.078	+.221
34	+.078	+.131
35	+.078	+.041
36	+.078	–.049
37	+.078	–.139
38	+.078	–.229
39	+.078	–.319
40	+.172	+.279
41	+.156	+.176
42	+.156	+.086
43	+.156	–.004
44	+.156	–.094
45	+.156	–.184
46	+.156	–.274
47	+.242	+.221
48	+.234	+.131
49	+.234	+.041
50	+.234	–.049
51	+.234	–.139
52	+.234	–.229
53	+.312	+.086
54	+.312	–.004
55	+.312	–.094

All dimensions for reference only. For alternate rotations see page 46 for Series III, page 86 for Series II, and page 114 for Series I.
Note: Shown in this catalog are the most common insert patterns for PCB applications. For availability of other arrangements, consult Amphenol Aerospace.

Amphenol Aerospace

Insert Arrangements

INSERT ARRANGEMENT #18-11 / 19-11

Connector Type:	JT MIL-DTL-38999 Series II	LJT MIL-DTL-38999 Series I
Insert Designation:	18-11	19-11

Number of Contacts	Contact Size	Service Rating
11	16	II

Contact Locations
Front face of pin insert shown

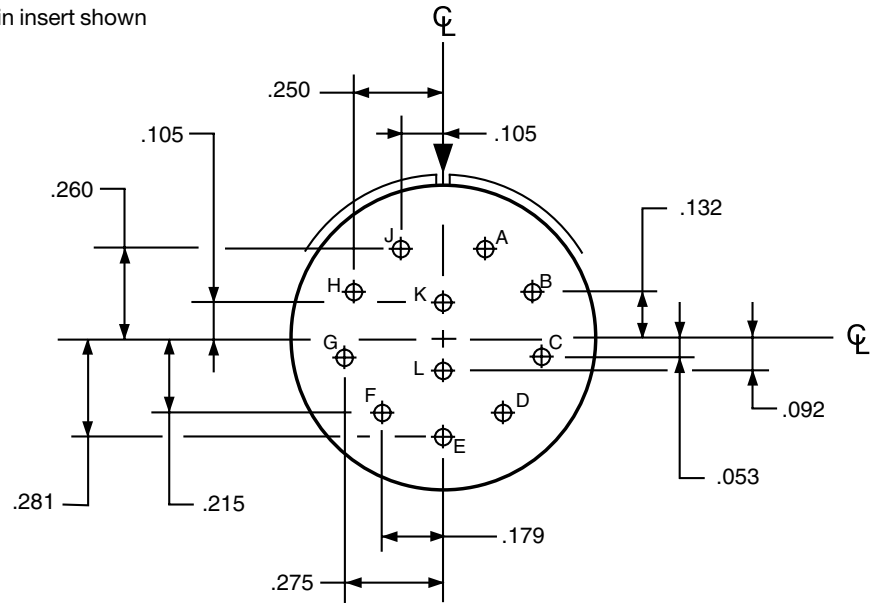

INSERT ARRANGEMENT #18-32 / 19-32

Connector Type:	JT MIL-DTL-38999 Series II	LJT MIL-DTL-38999 Series I	Tri-Start MIL-DTL-38999 Series III
Insert Designation:	18-32	19-32	19-32

Number of Contacts	Contact Size	Service Rating
32	20	I

Contact Locations
Front face of pin insert shown

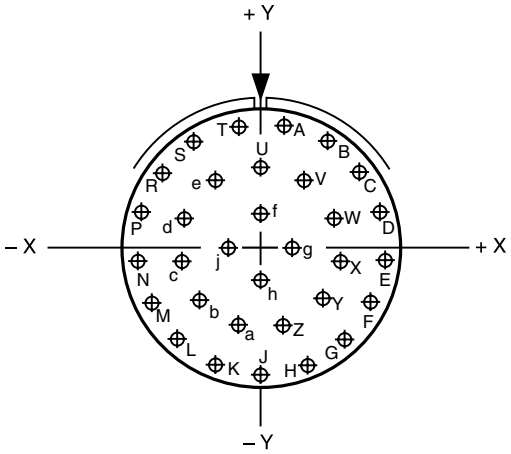

Contact Hole Locations		
Contact Letter	Location X Axis	Location Y Axis
A	+.066	+.353
B	+.189	+.305
C	+.286	+.217
D	+.345	+.098
E	+.357	–.033
F	+.321	–.160
G	+.242	–.265
H	+.130	–.335
J	.000	–.359
K	–.130	–.335
L	–.242	–.265
M	–.321	–.160
N	–.357	–.033
P	–.345	+.098
R	–.286	+.217
S	–.189	+.305

Contact Hole Locations		
Contact Letter	Location X Axis	Location Y Axis
T	–.066	+.353
U	.000	+.230
V	+.124	+.193
W	+.209	+.095
X	+.228	–.033
Y	+.174	–.151
Z	+.065	–.221
a	–.065	–.221
b	–.174	–.151
c	–.228	–.033
d	–.209	+.095
e	–.124	+.193
f	.000	+.096
g	+.096	.000
h	.000	–.096
j	–.096	.000

All dimensions for reference only. For alternate rotations see page 46 for Series III, page 86 for Series II, and page 114 for Series I.
Note: Shown in this catalog are the most common insert patterns for PCB applications. For availability of other arrangements, consult Amphenol Aerospace.

PCB Contacts 38999, Series I LJT, II JT, III TV

Insert Arrangements

INSERT ARRANGEMENT #18-35 / 19-35

Connector Type:	JT MIL-DTL-38999 Series II	LJT MIL-DTL-38999 Series I	Tri-Start MIL-DTL-38999 Series III
Insert Designation:	18-35	19-35	19-35

Number of Contacts	Contact Size	Service Rating
66	22D	M

Contact Locations
Front face of pin insert shown

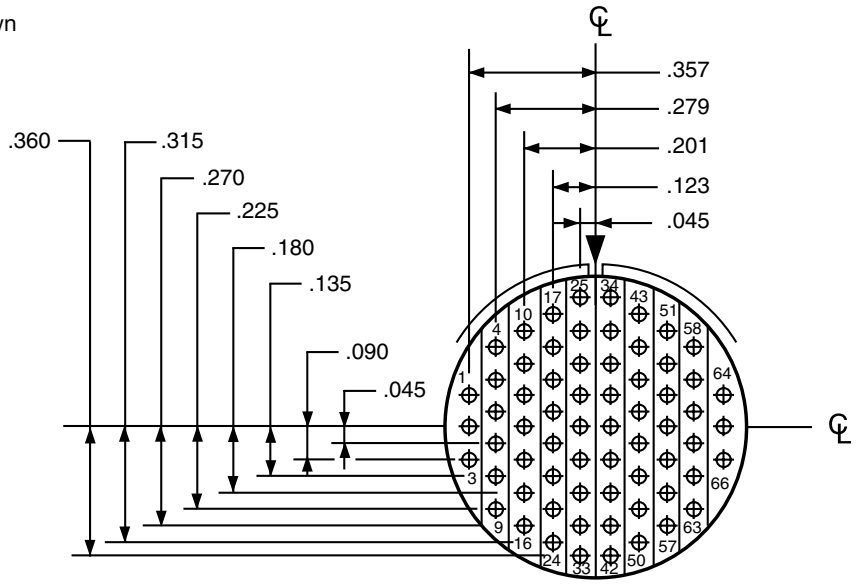

INSERT ARRANGEMENT #20-27 / 21-27

Connector Type:	JT MIL-DTL-38999 Series II	LJT MIL-DTL-38999 Series I	Tri-Start MIL-DTL-38999 Series III
Insert Designation:	20-27	21-27	NA

Number of Contacts	Contact Size	Service Rating
27	20	I

Contact Locations
Front face of pin insert shown

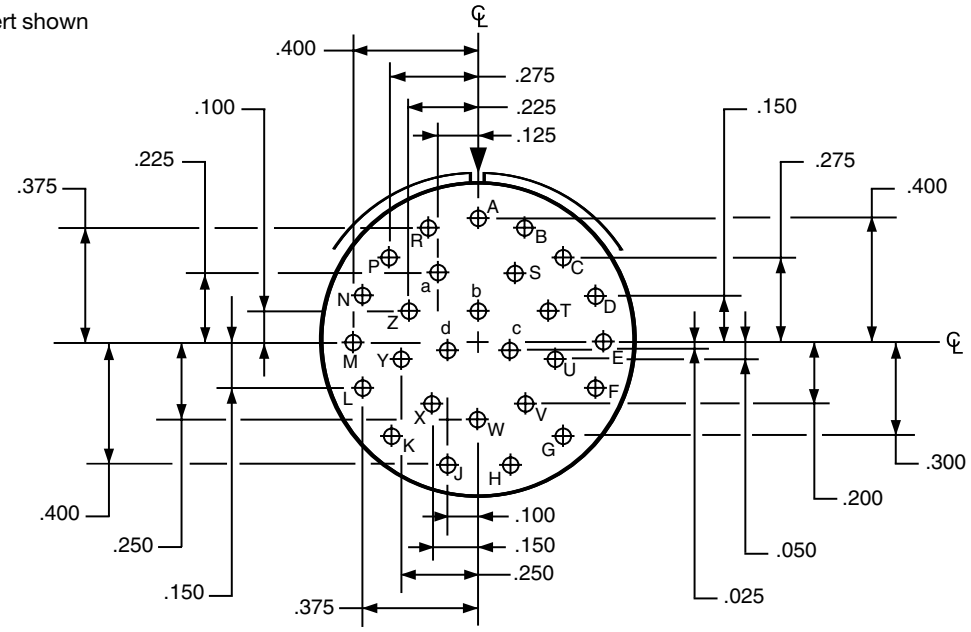

All dimensions for reference only. For alternate rotations see page 46 for Series III, page 86 for Series II, and page 114 for Series I.
Note: Shown in this catalog are the most common insert patterns for PCB applications. For availability of other arrangements, consult Amphenol.

Amphenol Aerospace

Insert Arrangements

INSERT ARRANGEMENT #20-35 / 21-35

Connector Type:	JT MIL-DTL-38999 Series II	LJT MIL-DTL-38999 Series I	Tri-Start MIL-DTL-38999 Series III
Insert Designation:	20-35	21-35	21-35

Number of Contacts	Contact Size	Service Rating
79	22D	M

Contact Locations
Front face of pin insert shown

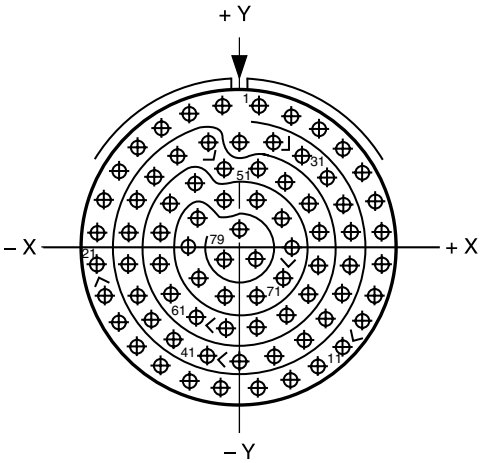

Contact Hole Locations		
Contact Number	Location X Axis	Location Y Axis
1	+.053	+.426
2	+.146	+.404
3	+.232	+.362
4	+.306	+.302
5	+.365	+.227
6	+.406	+.141
7	+.427	+.048
8	+.427	–.048

Contact Hole Locations		
Contact Number	Location X Axis	Location Y Axis
9	+.406	–.141
10	+.365	–.227
11	+.306	–.302
12	+.232	–.362
13	+.146	–.404
14	+.053	–.426
15	–.053	–.426
16	–.146	–.404
17	–.232	–.362
18	–.306	–.302
19	–.365	–.227
20	–.406	–.141
21	–.427	–.048
22	–.427	+.048
23	–.406	+.141
24	–.365	+.227
25	–.306	+.302
26	–.232	+.362
27	–.146	+.404
28	–.053	+.426
29	.000	+.323
30	+.098	+.322
31	+.184	+.280
32	+.258	+.220
33	+.311	+.141
34	+.332	+.048
35	+.332	–.048
36	+.311	–.141
37	+.258	–.220
38	+.184	–.280
39	+.098	–.322
40	.000	–.347
41	–.098	–.322
42	–.184	–.280

Contact Hole Locations		
Contact Number	Location X Axis	Location Y Axis
43	–.258	–.220
44	–.311	–.141
45	–.332	–.048
46	–.332	+.048
47	–.311	+.141
48	–.258	+.220
49	–.184	+.280
50	–.098	+.322
51	–.048	+.241
52	+.048	+.241
53	+.134	+.199
54	+.208	+.139
55	+.237	+.048
56	+.237	–.048
57	+.208	–.139
58	+.134	–.199
59	+.048	–.241
60	–.048	–.241
61	–.134	–.199
62	–.208	–.139
63	–.237	–.048
64	–.237	+.048
65	–.208	+.139
66	–.134	+.199
67	–.048	+.146
68	+.048	+.146
69	+.125	+.090
70	+.155	.000
71	+.125	–.090
72	+.048	–.146
73	–.048	–.146
74	–.125	–.090
75	–.155	.000
76	–.125	+.090
77	.000	+.053
78	+.048	–.029
79	–.048	–.029

All dimensions for reference only. For alternate rotations see page 46 for Series III, page 86 for Series II, and page 114 for Series I.
Note: Shown in this catalog are the most common insert patterns for PCB applications. For availability of other arrangements, consult Amphenol Aerospace.

PCB Contacts 38999, Series I LJT, II JT, III TV

Insert Arrangements

INSERT ARRANGEMENT #20-41 / 21-41

Connector Type:	JT MIL-DTL-38999 Series II	LJT MIL-DTL-38999 Series I	Tri-Start MIL-DTL-38999 Series III
Insert Designation:	20-41	21-41	21-41

Number of Contacts	Contact Size	Service Rating
41	20	I

Contact Locations
Front face of pin insert shown

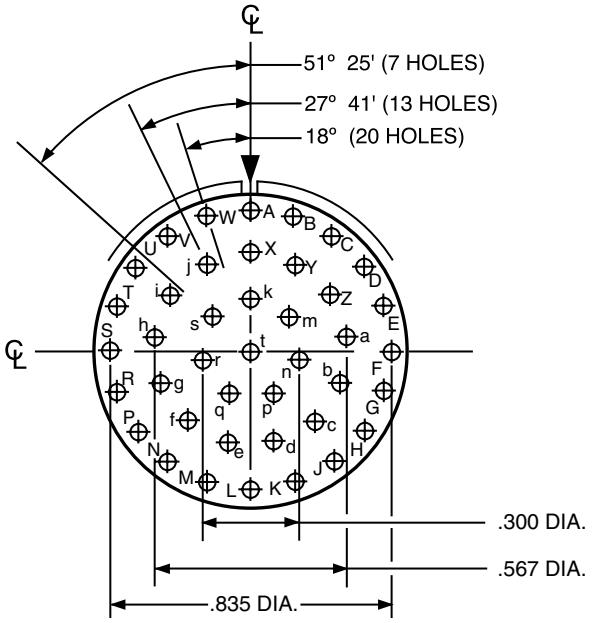

All dimensions for reference only. For alternate rotations see page 46 for Series III, page 86 for Series II, and page 114 for Series I.
Note: Shown in this catalog are the most common insert patterns for PCB applications. For availability of other arrangements, consult Amphenol Aerospace.

Amphenol Aerospace

Insert Arrangements

INSERT ARRANGEMENT #22-35 / 23-35

Connector Type:	JT MIL-DTL-38999 Series II	LJT MIL-DTL-38999 Series I	Tri-Start MIL-DTL-38999 Series III
Insert Designation:	22-35	23-35	23-35

Number of Contacts	Contact Size	Service Rating
100	22D	M

Contact Locations
Front face of pin insert shown

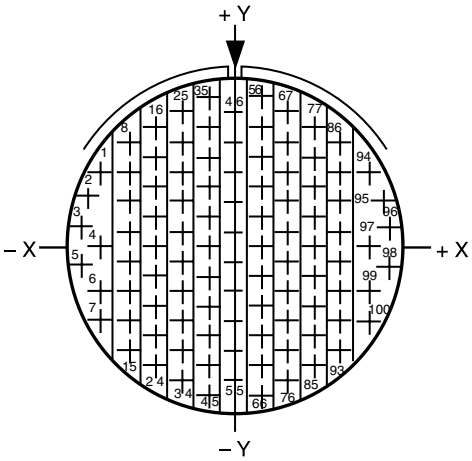

Contact Hole Locations		
Contact Number	Location X Axis	Location Y Axis
1	–.428	+.241
2	–.467	+.154
3	–.488	+.061
4	–.415	.000
5	–.488	–.061
6	–.428	–.142
7	–.428	–.237
8	–.332	+.333
9	–.332	+.238
10	–.332	+.143
11	–.332	+.048
12	–.332	–.047
13	–.332	–.142
14	–.332	–.237
15	–.332	–.332
16	–.249	+.380
17	–.249	+.285
18	–.249	+.190
19	–.249	+.095

Contact Hole Locations		
Contact Number	Location X Axis	Location Y Axis
20	–.249	.000
21	–.249	–.095
22	–.249	–.190
23	–.249	–.285
24	–.249	–.380
25	–.166	+.428
26	–.166	+.333
27	–.166	+.238
28	–.166	+.143
29	–.166	+.048
30	–.166	–.047
31	–.166	–.142
32	–.166	–.237
33	–.166	–.332
34	–.166	–.427
35	–.083	+.475
36	–.083	+.380
37	–.083	+.285
38	–.083	+.190
39	–.083	+.095
40	–.083	.000
41	–.083	–.095
42	–.083	–.190
43	–.083	–.285
44	–.083	–.380
45	–.083	–.475
46	.000	+.428
47	.000	+.333
48	.000	+.238
49	.000	+.143
50	.000	+.048
51	.000	–.047
52	.000	–.142
53	.000	–.237
54	.000	–.332
55	.000	–.427
56	+.083	+.475
57	+.083	+.380
58	+.083	+.285
59	+.083	+.190

Contact Hole Locations		
Contact Number	Location X Axis	Location Y Axis
60	+.083	+.095
61	+.083	.000
62	+.083	–.095
63	+.083	–.190
64	+.083	–.285
65	+.083	–.380
66	+.083	–.475
67	+.166	+.428
68	+.166	+.333
69	+.166	+.238
70	+.166	+.143
71	+.166	+.048
72	+.166	–.047
73	+.166	–.142
74	+.166	–.237
75	+.166	–.332
76	+.166	–.427
77	+.249	+.380
78	+.249	+.285
79	+.249	+.190
80	+.249	+.095
81	+.249	.000
82	+.249	–.095
83	+.249	–.190
84	+.249	–.285
85	+.249	–.380
86	+.332	+.333
87	+.332	+.238
88	+.332	+.143
89	+.332	+.048
90	+.332	–.047
91	+.332	–.142
92	+.332	–.237
93	+.332	–.332
94	+.428	+.241
95	+.467	+.154
96	+.488	+.061
97	+.415	.000
98	+.488	–.061
99	+.428	–.142
100	+.428	–.237

All dimensions for reference only. For alternate rotations see page 46 for Series III, page 86 for Series II, and page 114 for Series I.
Note: Shown in this catalog are the most common insert patterns for PCB applications. For availability of other arrangements, consult Amphenol Aerospace.

PCB Contacts 38999, Series I LJT, II JT, III TV

Insert Arrangements

INSERT ARRANGEMENT #22-55 / 23-55

Connector Type:	JT MIL-DTL-38999 Series II	LJT MIL-DTL-38999 Series I	Tri-Start MIL-DTL-38999 Series III
Insert Designation:	22-55	23-55	23-55

Number of Contacts	Contact Size	Service Rating
55	20	I

Contact Locations
Front face of pin insert shown

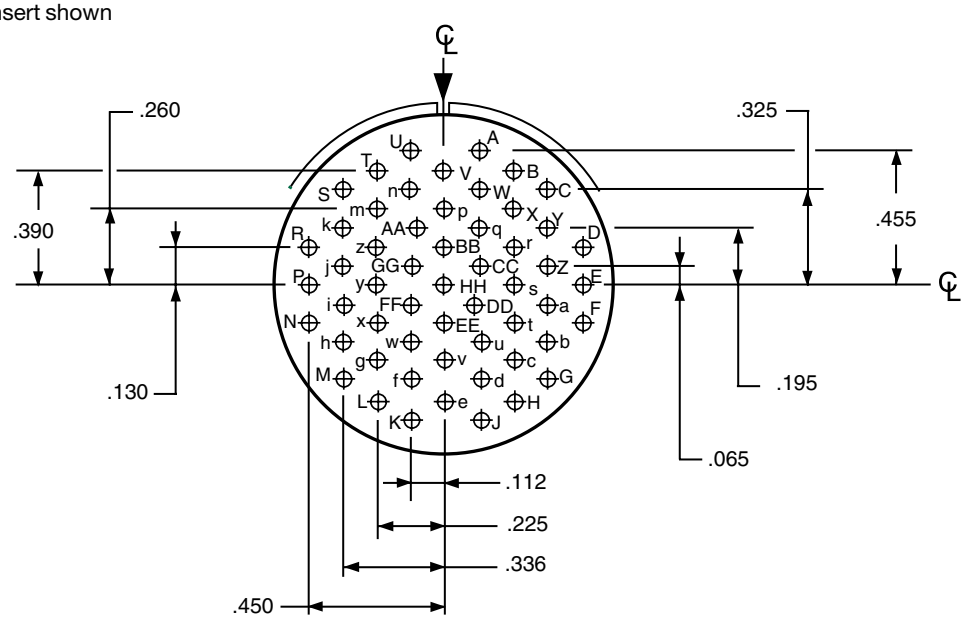

INSERT ARRANGEMENT #24-31 / 25-31

Connector Type:	JT MIL-DTL-38999 Series II	LJT MIL-DTL-38999 Series I	Tri-Start MIL-DTL-38999 Series III
Insert Designation:	24-31	NA	NA

Number of Contacts	Contact Size	Service Rating
31	16	I

Contact Locations
Front face of pin insert shown

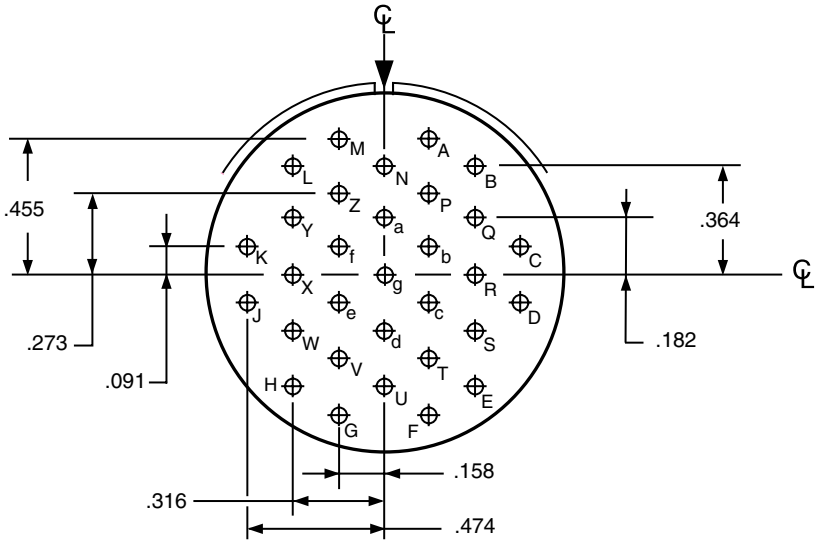

All dimensions for reference only. For alternate rotations see page 46 for Series III, page 86 for Series II, and page 114 for Series I.
Note: Shown in this catalog are the most common insert patterns for PCB applications. For availability of other arrangements, consult Amphenol Aerospace.

Amphenol Aerospace

INSERT ARRANGEMENT #24-35 / 25-35

Connector Type:	JT MIL-DTL-38999 Series II	LJT MIL-DTL-38999 Series I	Tri-Start MIL-DTL-38999 Series III
Insert Designation:	24-35	25-35	25-35

Number of Contacts	Contact Size	Service Rating
128	22D	M

Contact Locations
Front face of pin insert shown

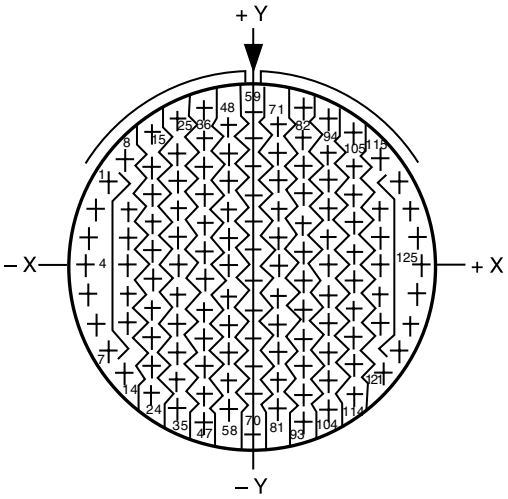

Contact Hole Locations		
Contact Number	Location X Axis	Location Y Axis
1	–.479	+.279
2	–.520	+.190
3	–.546	+.095
4	–.555	.000
5	–.546	–.095
6	–.520	–.190
7	–.479	–.279
8	–.424	+.357
9	–.415	+.190
10	–.415	+.095
11	–.415	.000
12	–.415	–.095
13	–.415	–.190
14	–.424	–.357
15	–.332	+.444
16	–.332	+.332
17	–.332	+.237
18	–.332	+.142
19	–.332	+.047
20	–.332	–.047
21	–.332	–.142
22	–.332	–.237
23	–.332	–.332
24	–.332	–.427
25	–.249	+.496
26	–.249	+.380
27	–.249	+.285
28	–.249	+.190

Contact Hole Locations		
Contact Number	Location X Axis	Location Y Axis
29	–.249	+.095
30	–.249	.000
31	–.249	–.095
32	–.249	–.190
33	–.249	–.285
34	–.249	–.380
35	–.249	–.475
36	–.160	+.531
37	–.166	+.427
38	–.166	+.332
39	–.166	+.237
40	–.166	+.142
41	–.166	+.047
42	–.166	–.047
43	–.166	–.142
44	–.166	–.237
45	–.166	–.332
46	–.166	–.427
47	–.166	–.522
48	–.083	+.475
49	–.083	+.380
50	–.083	+.285
51	–.083	+.190
52	–.083	+.095
53	–.083	.000
54	–.083	–.095
55	–.083	–.190
56	–.083	–.285
57	–.083	–.380
58	–.083	–.475
59	.000	+.522
60	.000	+.427
61	.000	+.332
62	.000	+.237
63	.000	+.142
64	.000	+.047
65	.000	–.047
66	.000	–.142
67	.000	–.237
68	.000	–.332
69	.000	–.427
70	.000	–.555
71	+.083	+.475
72	+.083	+.380
73	+.083	+.285
74	+.083	+.190
75	+.083	+.095
76	+.083	.000
77	+.083	–.095
78	+.083	–.190

Contact Hole Locations		
Contact Number	Location X Axis	Location Y Axis
79	+.083	–.285
80	+.083	–.380
81	+.083	–.475
82	+.160	+.531
83	+.166	+.427
84	+.166	+.332
85	+.166	+.237
86	+.166	+.142
87	+.166	+.047
88	+.166	–.047
89	+.166	–.142
90	+.166	–.237
91	+.166	–.332
92	+.166	–.427
93	+.166	–.522
94	+.249	+.496
95	+.249	+.380
96	+.249	+.285
97	+.249	+.190
98	+.249	+.095
99	+.249	.000
100	+.249	–.095
101	+.249	–.190
102	+.249	–.285
103	+.249	–.380
104	+.249	–.475
105	+.332	+.444
106	+.332	+.332
107	+.332	+.237
108	+.332	+.142
109	+.332	+.047
110	+.332	–.047
111	+.332	–.142
112	+.332	–.237
113	+.332	–.332
114	+.332	–.427
115	+.424	+.357
116	+.415	+.190
117	+.415	+.095
118	+.415	.000
119	+.415	–.095
120	+.415	–.190
121	+.424	–.357
122	+.479	+.279
123	+.520	+.190
124	+.546	+.095
125	+.555	.000
126	+.546	–.095
127	+.520	–.190
128	+.479	–.279

All dimensions for reference only. For alternate rotations see page 46 for Series III, page 86 for Series II, and page 114 for Series I.
Note: Shown in this catalog are the most common insert patterns for PCB applications. For availability of other arrangements, consult Amphenol Aerospace.

PCB Contacts 38999, Series I LJT, II JT, III TV

Insert Arrangements

INSERT ARRANGEMENT #24-61 / 25-61

Connector Type:	JT MIL-DTL-38999 Series II	LJT MIL-DTL-38999 Series I	Tri-Start MIL-DTL-38999 Series III
Insert Designation:	24-61	25-61	25-61

Number of Contacts	Contact Size	Service Rating
61	20	I

Contact Locations

Front face of pin insert shown

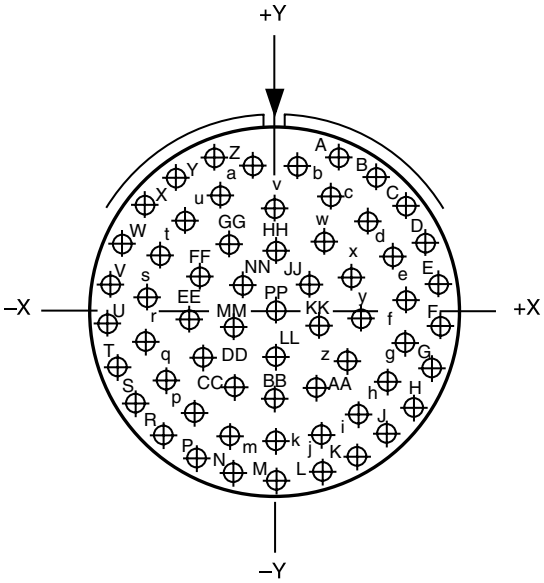

Contact Hole Locations		
Contact Number	Location X Axis	Location Y Axis
A	+.196	+.500
B	+.314	+.435
C	+.413	+.343
D	+.485	+.230
E	+.527	+.101
F	+.536	–.030
G	+.511	–.164
H	+.454	–.287
J	+.368	–.391
K	+.259	–.470
L	+.134	–.519
M	.000	–.537
N	–.134	–.519
P	–.259	–.470
R	–.368	–.391
S	–.454	–.287
T	–.511	–.164
U	–.536	–.030
V	–.527	+.101
W	–.485	+.230
X	–.413	+.343
Y	–.314	+.435
Z	–.196	+.500
a	–.068	+.454
b	+.068	+.454
c	+.173	+.363
d	+.285	+.283
e	+.362	+.175
f	+.399	+.046
g	+.392	–.088

Contact Hole Locations		
Contact Number	Location X Axis	Location Y Axis
h	+.341	–.213
i	+.251	–.314
j	+.133	–.379
k	.000	–.402
m	–.133	–.379
n	–.251	–.314
p	–.341	–.213
q	–.392	–.088
r	–.399	+.046
s	–.362	+.175
t	–.285	+.283
u	–.173	+.363
v	.000	+.338
w	+.147	+.223
x	+.237	+.122
y	+.267	–.010
z	+.228	–.139
AA	+.131	–.233
BB	.000	–.267
CC	–.131	–.233
DD	–.228	–.139
EE	–.267	–.010
FF	–.237	+.122
GG	–.147	+.223
HH	.000	+.200
JJ	+.105	+.094
KK	+.135	–.041
LL	.000	–.132
MM	–.135	–.041
NN	–.105	+.094
PP	.000	.000

All dimensions for reference only.For alternate rotations see page 46 for Series III, page 86 for Series II, and page 114 for Series I.
Note: Shown in this catalog are the most common insert patterns for PCB applications. For availability of other arrangements, consult Amphenol Aerospace.

Contact Ratings/ Service Ratings

CONTACT RATING FOR TV III, HD, JT II, LJT I, SJT

Contact Size	Test Current (Amps)		Maximum Millivolt Drop Crimp*	Maximum Millivolt Drop
	Crimp	Hermetic		Hermetic*
23	5	3	73	85
22M	3	2	45	60
22D	5	3	73	85
22	5	3	73	85
20	7.5	5	55	60
16	13	10	49	85
12	23	17	42	85
10 (Power)	33	NA	33	NA
8 (Power)	46	NA	26	NA
4	80	NA	23	NA
0	150	NA	21	NA

*When tested using silver plated wire.

Contact Size	Crimp Well Data		Solder Well Data	
	Well Diameter	Normal Well Depth	Well Diameter	Nominal Well Depth
23	.0345 ± .0010	.141	.0345 ± .0010	.130
22M	.028 ± .001	.141	.029 +.004 – .000	
22D	.0345 ± .0010	.141	.036 +.004 -.000	.094
22	.0365 ± .0010	.141	.036 +.004 -.000	.094
20	.047 ± .001	.209	.044 +.004 -.004	.125
16	.067 ± .001	.209	.078 +.000 -.004	.141
12	.100 ± .002	.209	.116 +.004 -.002	.141
10 (Power)	.137 ± .002	.355	NA	NA
8	.181 ± .002	.490	NA	NA
4	.281 ± .002	.490	NA	NA
0	.453 ± .002	.585	NA	NA

MIL-DTL-38999 SERIES III STANDARD 500 CYCLE CONTACTS FOR TV AND CTV, P & S

Contact Size	TV/CTV Pins		TV/CTV Sockets	
	Military No.	Supersedes	Military No.	Supersedes
8 (Coax)*	M39029/60-367	MS27536	M39029/59-366	MS27535
8 (Power)	Contact Factory	"	"	"
8 (Twinax)	M39029/90-529**	N/A	M39029/91-530	N/A
10 (Power)	M39029/58-528	N/A	M39029/56-527	N/A
12	M39029/58-365	MS27493-12	M39029/56-353	MS27490-12
16	M39029/58-364	MS27493-16	M39029/56-352	MS27490-16
20	M39029/58-363	MS27493-20	M39029/56-351	MS27490-20
22D	M39029/58-360	MS27493-22D	M39029/56-348	MS27490-22D
4	N/A	N/A	N/A	N/A
0	N/A	N/A	N/A	N/A

Above part numbers include standard 500 cycle finish designation - gold plating over suitable underplate in accordance with SAE AS39029. For other finish variations, consult Amphenol Aerospace.

*For use with RG180B/U and RG195A/U cable. For other size 8 coax or optional sizes 12 and 16 coax contacts available for use in Tri-Start connectors, see High Speed catalog or consult Amphenol Aerospace.

MIL-DTL-38999 SERIES III 1500 CYCLE CONTACTS, CLASSES H & J

Contact Size	CTV Pins			CTV Sockets		
	Commercial No.	Military No.	Supersedes	Commercial No.	Military No.	Supersedes
12	10-597072-2X	M39029/107-623	–	10-597073-2X	M39029/106-617	–
16	10-597068-2X	M39029/107-622	–	10-597069-2X	M39029/106-616	–
20	10-597064-2X	M39029/107-621	–	10-597065-2X	M39029/106-615	–
22D	10-597058-3X	M39029/107-620	–	10-597061-2X	M39029/106-614	–

MIL-DTL-38999, Series I LJT, II JT, III TV

Thermocouple Contacts/Sealing Plugs

MIL-DTL-38999 SERIES II JT/ SERIES I LJT/SJT SERIES CRIMP CONTACTS

Contact Size	JT/LJT/SJT Pins MS No.	JT Socket MS No.	LJT/SJT Sockets MS No.
8 (Coax)*	M39029/60-367	NA	M39029/59-366
8 (Twinax)	M39029/90-529**	NA	M39029/91-530
10 (Power)	M39029/58-528	NA	M39029/56-527
12	M39029/58-365	M39029/57-359	M39029/56-353
16	M39029/58-364	M39029/57-358	M39029/56-352

Contact Size	JT/LJT Pins MS No.	JT Socket MS No.	LJT/SJT Sockets MS No.
20	M39029/58-363	M39029/57-357	M39029/56-351
22	M39029/58-362	M39029/57-356	M39029/56-350
22M	M39029/58-361	M39029/57-355	M39029/56-349
22D	M39029/58-360	M39029/57-354	M39029/56-348

MIL-DTL-38999 SERIES II JT/ I LJT THERMOCOUPLE CONTACTS

Contact Size	Material	JT/LJT Pins	JT Sockets	LJT Sockets
20	Chromel	10-407862-310	10-407863-310	10-407236-310
	Alumel	10-407862-320	10-407863-320	10-407865-320
	Iron	10-407862-335	10-407863-335	10-407865-335
	Constantan	10-407862-342	10-407863-342	10-407865-342

Partial Listing. If you do not see the contact for your application, consult Amphenol Aerospace.

MIL-DTL-38999 SERIES II JT/ I LJT THERMOCOUPLE CONTACTS PYLE VERSION

Contact Size	Pins (II JT/I LJT)		Sockets (LJT)		Material
	Spec Number	Pyle Number	Spec Number	Pyle Number	
22D	M39029/87-472	T3-4022-10P	M39029/88-484	T3-4122-10P	CHROMEL
22D	M39029/87-471	T3-4022-10R	M39029/88-483	T3-4122-10R	ALUMEL
20	M39029/87-476	T3-4020-10P	M39029/88-488	TS-4120-10P	CHROMEL
20	M39029/87-475	T3-4020-10R	M39029/88-487	T3-4120-10R	ALUMEL
16	M39029/87-480	T3-4016-10P	M39029/88-492	T3-4116-10P	CHROMEL
16	M39029/87-479	T3-4016-10R	M39029/88-491	T3-4116-10R	ALUMEL

Above part numbers include standard finish designation - gold plating over suitable underplate in accordance with MIL-DTL-39029. For other finishes, consult Amphenol Aerospace. Note: 22M and 22D contacts are interchangeable. *For use with RG180B/U and RG195A/U cable. For other size 8 coax or optional sizes 12 and 18 coax contacts available for use in JT/LJT connectors, Refer to the High Speed Catalog. ** For use with 17/M176-00002 cable.

MIL-DTL-38999 SERIES III SEALING PLUGS

Contact Size	Commercial No.	Military No.
8 (Coax)	10-482099-8	N/A
8 (Twinax)	T3-4008-59P	N/A
8 (Power)	10-405996-83	MS27488-8-3
10 (Power)	T3-4010-59P	M85049/81-10
12	10-405996-122	MS27488-12-2
16	10-405996-162	MS27488-16-2
20	10-405996-202	MS27488-20-2
22D	10-405996-222	MS27488-22-2
4	10-405996-43	MS27488-4-3
0	10-405996-03	MS27488-0-3

MIL-DTL-38999 SERIES II JT/ I LJT SEALING PLUGS

Contact Size	Commercial No.	Military No.
8 (Coax)	10-482099-8	MS27488-8
8 (Twinax)	T3-4008-59P	N/A
10 (Power)	10-576225	N/A
12	10-405996-122	MS27488-12-2
16	10-405996-162	MS27488-16-2
20	10-405996-202	MS27488-20-2
22	10-405996-222	MS27488-22-2
22M	10-405996-222	MS27488-22-2
22D	10-405996-222	MS27488-22-2

SJT SEALING PLUGS

Contact Size	Commercial No.
8 (Coax)	10-482099-8
8 (Twinax)	10-482099-8
10 (Power)	NA
12	10-405996-012 Yellow
16	10-405996-016 Blue
20	10-405996-020 Red
22	10-405996-022 Black
22M	10-405996-022 Black
22D	10-405996-022 Black

** For use with M17/M176-00002 cable.
† Optional design - see slash sheet MS39029.
For other contact options available for use in Tri-Start connectors (wire wrap, thermocouple, fiber optic), consult Amphenol.

SERVICE RATING**

Service Rating	Suggested Oper. Voltage (Sea Level)		Test Voltage (Sea Level)	Test Voltage 50,000 Ft.	Test Voltage 70,000 Ft	Test Voltage 110,000 Ft.
	AC (RMS)	DC				
M	400	500	1300 VRMS	550 VRMS	350 VRMS	200 VRMS
N	300	450	1000 VRMS	400 VRMS	260 VRMS	200 VRMS
I	600	850	1800 VRMS	600 VRMS	400 VRMS	200 VRMS
II	900	1250	2300 VRMS	800 VRMS	500 VRMS	200 VRMS

** Please note that the establishment of electrical safety factors is left entirely in the designer's hands, since they are in the best position to know what peak voltage, switching surges, transients, etc. can be expected in a particular circuit.

FINISH DATA MIL-DTL-38999, TRI-START, SERIES III TV

ALUMINUM SHELL COMPONENTS NON-HERMETIC*		
Finish	Service Class	
	Military	Commercial
Anodic Coating (Non-Conductive)	C*	RX**
Electroless Nickel	F (Metal)*	RF
	M (Composite)	
Olive Drab Cadmium Plate Nickel Base	W (Metal)*	RW
	J (Composite)	
Stainless Steel with Nickel Plate (non-firewall)	L	
Stainless Steel with Nickel Plate (firewall)	S	RS
Stainless Steel	K	RK
Durmalon plated	T*	DT
Zinc-Nickel Plated	Z*	DZ
Electroless Nickel Space Grade	G	

**Add Suffix (005) to part number.

HERMETIC SHELL COMPONENTS		
Material/Finish	Service Class	
	Military	Commercial
Stainless Steel	Y	Y
Stainless Steel with Nickel Plate	N	YN

FINISH DATA MIL-DTL-38999, SERIES I LJT, II JT

ALUMINUM SHELL COMPONENTS NON-HERMETIC					
Finish	Suffix		Finish Plus "SR" Suffix	Indicated Finish Standard for JT Types Listed Below	Indicated Finish Standard for LJT Types Listed Below
	Military	Commercial			
Cadmium Plated Nickel Base	MS (A)	–	(SR)	JT/JTG/JTL/JTP	LJT/LJTP
Anodic Coating (Alumilite)	MS (C)	(005)	(300)	JTS/JTPS/JTLS	LJTPS/LJTS
Chromate Treated (Iridite 14-2)		(011)	(344)	JTN/JTPN/JTLN	LJTN/LJTPN
Olive Drab Cadmium Plate Nickel Base	MS (B)	(014)	(386)		
Electroless Nickel	MS (F)	(023)	(424)		
Nickel-PTFE Durmalon		(038)			
Space Grade		(453)			

HERMETIC CONNECTORS				
Finish	Suffix		Indicated Finish Standard for JT Types Listed Below	Indicated Finish Standard for LJT Types Listed Below
	Military	Commercial		
Carbon Steel Shell Tin Plated Shell and Contacts			JT( )H / JT( )Y JTL( )H / JTL( )Y	LJT( )Y LJT( )H
Carbon Steel Shell Tin Plated Shell and Gold Plated Contacts	MS (D)			
Stainless Steel Shell Gold Plated Contacts	MS (E)	(162)	JTS( )Y JTLS( )Y	LJTS( )Y

Amphenol RoHS Compliant Platings

Alternative to Cadmium

DURMALON™

Amphenol's Answer to EU RoHS/ELV/Cadmium Free Restrictions

Commercial, industrial & military markets are rapidly moving away from restricted materials such as Cadmium (Cd) & Hexavalent Chromium (Cr(VI)). Both of these restricted materials are toxic and are known carcinogens. Amphenol is offering an alternative finish that complies with all customer requirements tied to these specifications.

MIL-DTL-38999, Rev L has established new service classes for alternative finishes addressing these requirements for Cadmium replacement. Amphenol is using this and European Union Directive 2002/95/EC RoHS (Regulation of Hazardous Substances) as a guide to qualification for all domestic, global, commercial, industrial, & military specifications requiring the reduction or elimination of these restricted materials.

Amphenol has qualified Durmalon, with internal part number coding "DT" finish, which meets or exceeds the 38999 designated class "T" finish, Nickel Fluorocarbon Polymer. Durmalon is also EU RoHS compliant and is Cadmium free, Lead free, and Hexavalent Chromium free.

We also offer additional platings such as "DX", (Durmalon, heavy duty final plate) to support JSF, F-35 program. The DX plating is intended to meet higher corrosion Sulfur Dioxide (SO2)/salt fog requirements of JSF.

Cadmium has been applied to numerous components of land, sea and air weapon systems and NASA systems for many years as it provides sacrificial corrosion protection and excellent lubricity for threaded applications.

The Defense Logistics Agency (DLA) has added the following cadmium alternative finishes to MIL-DTL-38999, Rev L (and other connector specs):

- Nickel Fluorocarbon Polymer
- Zinc-Nickel

AMPHENOL'S DURMALON™

Durmalon, like Olive-Drab Cadmium plating (Class W), meets 500 hours of dynamic salt spray, combined with 500 mating cycles and meets specified millivolt drop shell-to-shell conductivity. Durmalon also meets a 200° C temperature rating. Durmalon has been proven to meet this requirement as well as Potassium Formate-Deicer fluid testing performed by Boeing.

DURMALON™
Alternative to Cadmium

APPLICATIONS

Interest for non-hazardous alternative finishes is gaining momentum & many customers are currently using Durmalon for a broad number of applications. Durmalon combines the unique lubrication and anti-wetting properties of PTFE with corrosion resistance, high conductivity and EU RoHS compliance in a non-reflective finish.

TESTING

Amphenol Aerospace has performed extensive testing on numerous alternative platings with the most consistent performer being the Durmalon.
For specific applications please contact Amphenol Aerospace.

BLACK ZINC NICKEL

Black Zinc Nickel is Amphenol's 2nd RoHS Compliant Plating Alternative to Cadmium

Amphenol is now offering a new RoHS compliant alternative to Cadmium. Black Zinc Nickel is a non-reflective and conductive black finish approved for 500 hrs salt spray making it an excellent choice for harsh environments. Black Zinc Nickel has been qualified by the DLA, with internal part number coding "DZ" finish, which meets or exceeds the 38999 designated class "Z" finish. Black Zinc Nickel is compatible with other platings and available on a wide variety of connectors and accessories including all MIL-DTL-38999 Series III connectors.

APPLICATIONS

Interest for non-hazardous alternative finishes are gaining momentum & many customers are currently using Black Zinc Nickel for a broad number of applications. Black Zinc Nickel is typically used on applications for commercial aerospace and military defense, who are now moving away from toxic Cadmium to more environmentally friendly options.

TESTING

Amphenol Aerospace has performed extensive testing on numerous alternative platings including Black Zinc Nickel. For specific applications please contact Amphenol Aerospace.

Requirements	Cadmium	Durmalon™	Black Zinc Nickel
Coupling Torque Post 500 hr. salt	■	■	■
Shell to Shell Conductivity <2.5 millivolts	■	■	■
Cycles of Durability 500 mates	■	■	■
Salt Spray Dynamic 500 hours	■	■	■
Temperature Rating 175° C	■	■	■
Non-Reflective	■	■	■
EU RoHS/ELV Compliant*		■	■
Non-Magnetic	■	■	■
De-icing Fluid**		■	■

* Meets EU RoHS/ELV maximum concentration values (MCV) of 1000 ppm (0.1% w/w) or (0.01% w/w) per homogenous material.

** Potassium Formate/Acetate based de-icing fluids.

Note: Specifications are subject to change without notice.

MIL-DTL-38999, Series III, TV

Amphenol Aerospace

A

TABLE OF CONTENTS FOR SECTION A

Combined MIL-DTL-38999 Series I, II, III
Shell Size & Insert Arrangements Availability 2-5
Insert Arrangement Drawings 6-13
PCB Insert Arrangements 14-28
Contact - Ratings, Service Ratings, Finish Data 29-31
Amhenol RoHS Compliant Plating 32

MIL-DTL-38999, Series III TV
Performance, Options 34, 35
Test Data 36
Weight Comparison (Composite vs. Metal) 37
Dualok 38
HD38999, High Density 39
Custom 40
Configurator 41
How to Order (Military & Commercial) 42-46
How to Order (Boeing BACC63) 47

TV SHELL STYLES:
Crimp Wall Mounting Receptacle TVP00R (D389999/20) /CTVP00R (Military D38999/20) 48
Crimp Box Mounting Receptacle TVP02R / CTVP02R . . . 49
Line Receptacle TV01, TVS01, CTV01, CTVS01 50
Crimp Jam Nut Receptacle TV07R (D38999/24) / CTV07R (Military D38999/24) 51
Straight Plug TV06, TVS06, CTV06, CTVS06 (Military D38999/26). 52
Crimp Flange Mounting Plug TV09R 53
Dualok Plug/Receptacle TV56, TVS56, CTV56, CTVS56. . . 54
Crimp CLUTCH-LOK™ Straight Plug for High Vibration TV26/MTV26 55

PCB:
PCB Wall Mounting, Back Panel TVP00, TVPS00 56
PCBWall Mounting, Back Panel, Clinch Nuts, TVP10, TVPS10 57
PCB Wall Mounting, Double Flange, TVP40, TVPS40 58
PCB Box Mounting Receptacle, TVP02, TVPS02 59
PCB Box Mounting Receptacle, Clinch Nuts, TVP12, TVPS12 60
PCB Jam Nut Receptacle, TV07, TVS07 61
PCB Jam Nut Receptacle, Double Flange, TVP47, TVPS47 . 62
PCB Hermetic Box, Jam Nut, Solder , Weld Mounting. . . 63-66

HERMETIC:
Hermetic Box Mounting TVPS02Y(D38999/21) 67
Hermetic Jam Nut Receptacle TVS07Y (D38999/23) . .68
Hermetic Solder Mounting TVSIY (D38999/25) 69
Hermetic Weld Mounting TVSHIY (D38999/27) 69

BREAKAWAY:
Breakaway Fail-Safe Connectors 70
How to Order Breakaway (Military) 71, 72
How to Order Breakaway (Commercial) 73
Fail-Safe Lanyard Release Plug 74
How to Order Breakaway MIL-STD-1760 (Military) . . .75
TV Breakaway (D38999/31) for MIL-STD-1760 76
TV Breakaway Commercial Version for D38999/31, Type 6 77
How to Order Commercial Version D38999/31, Type 6 .78
Insert Arrangements for Breakaway Fail-Safe 79
Breakaway Fail-Safe 88-725041, 88-725014 80
Breakaway Hybrid, Low Profile Lanyard Release Plug. .81
Stores Management Type II, Rail Launch (MIL-STD-1760) 81

Accessories:
Section F 164-183

MIL-DTL-38999, Series III TV

Performance

TRI-START™ MIL-DTL-38999 SERIES III WITH METAL SHELLS - ALUMINUM, STAINLESS STEEL, CLASS K FIREWALL

Amphenol® Tri-Start MIL-DTL-38999* Series III Connectors offer the highest performance capabilities for both general duty and severe environment applications. Meeting or exceeding MIL-DTL-38999 Series III requirements, the Tri-Start connector with standard metal shells (aluminum or stainless steel with several finish options) offers these features:

- **EMI Shielding** - solid metal-to-metal coupling, grounding fingers, electroless nickel plating, and thicker wall sections provide superior EMI shielding capability of 65dB minimum at 10 GHz
- **Contact Protection** - recessed pins in this 100% scoop-proof connector minimize potential contact damage
- **Moisture Resistance** - improved interfacial seal design helps prevent electrolytic erosion of contacts
- **Corrosion Resistance** - shells of stainless steel or cadmium over nickel plating withstand a 500 hour salt spray exposure
- **Vibration/Shock** - operates under severe high temperature vibration, through 200°C
- **Firewall Capability** - available in a stainless steel shell, class RK, RS
- **Lockwiring Eliminated** - unique, self-locking, quick coupling connector eliminates lockwiring
- **Quick Coupling** - completely mates and self-locks in a 360° turn of the coupling nut
- **Inventory Support Commonality** - uses standard MIL-DTL-38999 contacts, application tools, insert arrangements
- **Electrostatic Discharge Protection (ESD)** - protection for sensitive circuitry without diodes, varistors, etc., with the use of the Faraday Cage principle which shunts high voltage, high current discharge events (see page Amphenol Filter Section)
- **Hermetic**- air leakage limited to 1 X 10^{-7} cm^3 per second optional
- **Qualified Specifications** - Stainless Steel qualified to BACC63DB and BACC63DC specifications

PASSIVATED STAINLESS STEEL

ELECTROLESS NICKEL

OLIVE DRAB CADMIUM

DURMALON PLATED

ZINC NICKEL PLATED

Amphenol Aerospace

OFFER MORE VERSATILITY & OPTIONS THAN ANY OTHER INTERCONNECTION FAMILY!

HD38999

DUALOK

FILTER

PC TAILS

FAIL SAFE

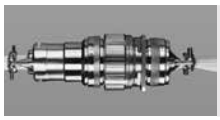
CLUTCH-LOK

FIBER OPTICS

HIGH SPEED

HERMETIC

FLEX

Composite Connector Patents:
4,268,103; 4,648,670; 4,682,832; 4,703,987.
Clutch-Lok® Patent 6,152,753.

High reliability and increased versatility best describe Amphenol MIL-DTL-38999, Series III circular connectors. Originally designed for the harshest of environments and most demanding of applications, Amphenol MIL-DTL-38999 Series III, Tri-Start connectors continue to evolve in pace with the needs of an ever-changing market.

Amphenol Tri-Start connectors can be configured with a number of application specific technologies like:

- High Density HD38999
- Dualok
- PC Tails
- Filters
- Fail Safe
- CLUTCH-LOK
- Fiber Optics
- High Speed Contacts
- Hermetics
- Flex

Flexibility aids in design optimization through the combination of different technologies within a common, time-tested, harsh environment connector body.

For more information about options, please call 800-678-0141 or visit www.amphenol-aerospace.com.

TRI-START, SERIES III TYPICAL SHIELDING EFFECTIVENESS TEST DATA

EMI/EMP SHIELDING EFFECTIVENESS dB
TESTING BY TRIAXIAL METHOD

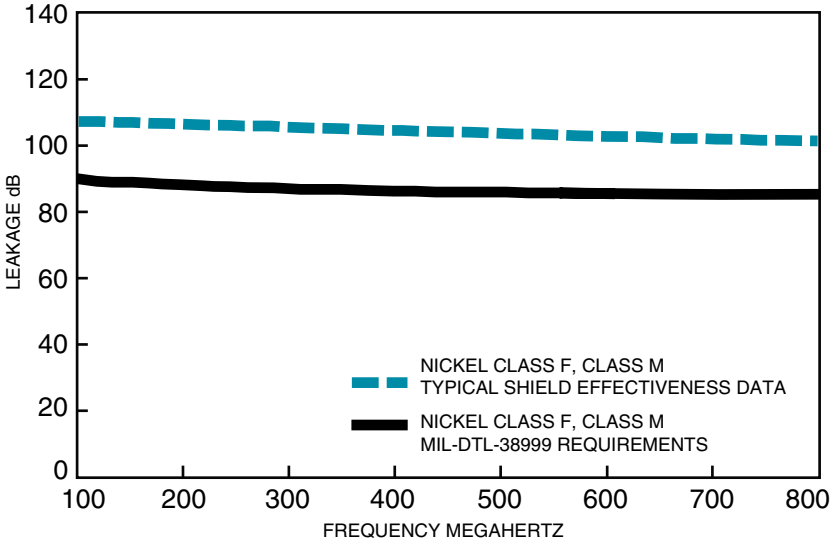

AMPHENOL® TRI-START CONNECTORS PROVIDE EMI/EMP SHIELDING CAPABILITY WHICH EXCEEDS MIL-DTL-38999 SERIES III REQUIREMENTS.

The TV and CTV Series III connector with standard solid metal-to-metal coupling, EMI grounding fingers and conductive finishes have proven to be the ultimate in EMI/EMP shielding effectiveness. The charts illustrate shielding effectiveness data which is typical of Tri-Start connectors tested with the nickel finish (Class F-metal, Class M-composite) over a wide frequency range.

The vibration capability of the Tri-Start Series is shown in the chart below. This illustrates the most severe vibration envelope of any qualified connector available today.

These capabilities along with a +200°C, -65°C temperature rating and superior moisture sealing protection provide the user with a connector that can withstand the most rigorous application.

TRI-START, SERIES III TYPICAL SHIELDING EFFECTIVENESS TEST DATA

EMI/EMP SHIELDING EFFECTIVENESS dB
TESTING BY MODE STIRRING METHOD

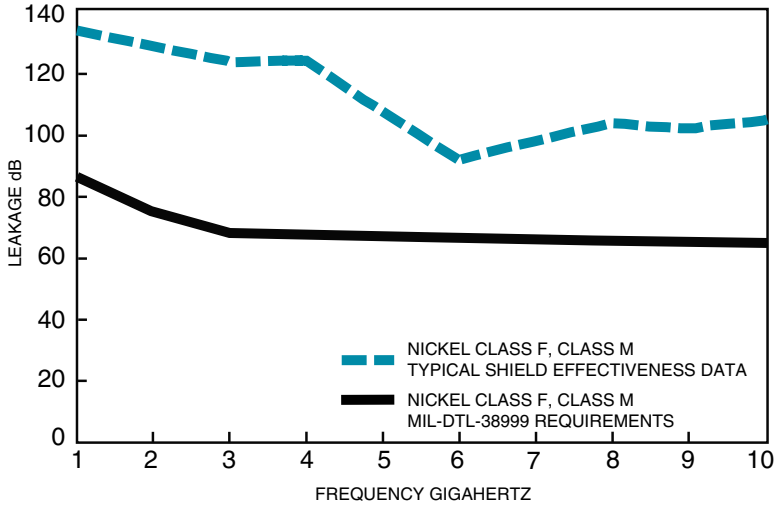

TRI-START VIBRATION CRITERIA

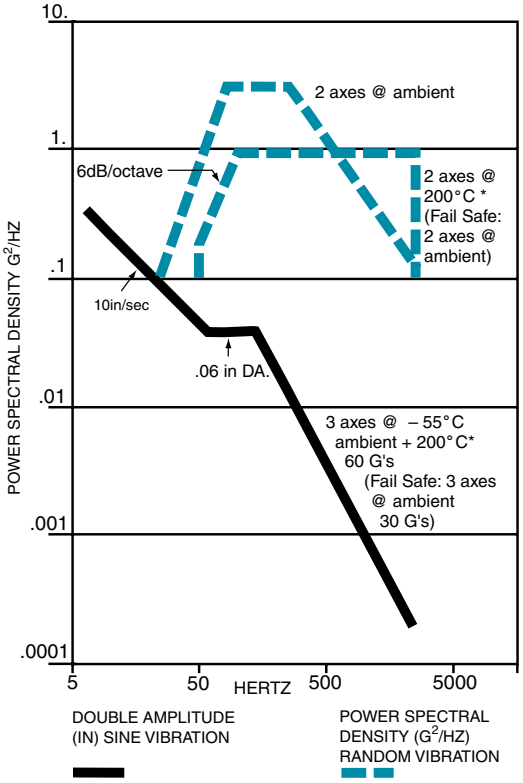

* Dependant on shell finish

Test data beyond 2GHz is subject to equipment variation.

NOTE: For test data information on the new Clutch-Lok Tri-Start, high vibration connectors, consult Amphenol Aerospace.

MIL-DTL-38999, Series III TV

Weight Comparisons (Composite vs. Metal)

Amphenol Aerospace

Depending on the shell style, shell size and contact count, weight savings can range from 17% to 40% compared to standard aluminum product.
Tri-Start Weight in Ounces (includes contacts)

	Wall Mount Receptacle (00) + Military D38999/20						Jam Nut Receptacle (07) + Military D38999/24						Plug (06) + Military D38999/26					
	Stainless Steel		Aluminum		Composite		Stainless		Aluminum		Composite		Stainless Steel		Aluminum		Composite	
	Pin	Socket	Pin	Socket	Pin	Socket	Pin	Socket	Pin	Socket	Pin	Socket	Pin	Socket	Pin	Socket	Pin	Socket
9-35	.7216	.7840	.3248	.3777	.2588	.3121	1.1472	1.2096	.4416	.5040	.3489	.4413	1.0736	1.1360	.4236	.4625	.2606	.2994
9-98	.7216	.7776	.2496	.3056	.1664	.2224	1.1472	1.2032	.4416	.4976	.3744	.4640	1.0736	1.1296	.3968	.4624	.2991	.2337
11-35	.9488	1.0800	.3632	.4960	.2753	.4081	1.4304	1.5632	.5936	.7264	.4679	.6007	1.2480	1.3808	.5312	.6389	.3450	.4582
11-98	.9488	1.0620	.3632	.4768	.2753	.3889	1.4304	1.5440	.5936	.7072	.4679	.5815	1.2480	1.3616	.5330	.6283	.3468	.4457
13-8	1.2096	1.3888	.4800	.6592	.3696	.5488	1.9104	2.0896	.7664	.9456	.6560	.8352	1.8048	1.9840	.7936	.9728	.5237	.5952
13-35	1.2160	1.4320	.4864	.7024	.3762	.5922	1.9168	2.1328	.7728	.9888	.6136	.8296	1.8112	2.0272	.8000	.8472	.5301	.6531
13-98	1.2160	1.4016	.4864	.6720	.3762	.5618	1.9168	2.1024	.7728	.9584	.6136	.7992	1.8112	1.9968	.7978	.9856	.5244	.7157
15-5	1.5312	1.7904	.6352	.8944	.5027	.7619	2.3792	2.6384	.9728	1.2320	.7749	1.0341	2.2704	2.5456	.9632	1.1719	.6450	.8467
15-18	1.5456	1.8416	.7760	.9456	.6432	.8128	2.3936	2.6896	.9872	1.2832	.8544	1.1504	2.2848	2.5808	.9776	1.2736	.6594	.8208
15-35	1.5424	1.8768	.6464	.9808	.5139	.8483	2.3904	2.7344	.9840	1.3280	.7861	1.1301	2.2816	2.6256	1.2179	1.3184	.8961	1.0002
17-6	2.1488	2.5904	.9360	1.3776	.7812	1.2228	2.9152	3.3568	1.2336	1.6752	.9940	1.4356	2.5008	3.1024	1.1408	1.7424	.8160	1.4176
17-26	2.1344	2.5600	.9216	1.3472	.7668	1.1924	2.9008	3.3264	1.2192	1.6448	.9796	1.4052	2.4864	2.9120	1.1264	1.3343	.8017	.8062
17-35	2.1360	2.6640	.9232	1.4512	.7684	1.2964	2.9024	3.4304	1.2208	1.7488	.9812	1.5092	2.4880	3.0160	1.1280	1.5497	.8033	1.2144
19-11	2.2592	2.6656	.9696	1.4528	.7925	1.2757	3.4352	3.9184	1.4720	1.9552	1.2033	1.6865	2.9808	3.4640	1.3472	1.8304	.9632	1.4464
19-32	2.1888	2.7264	.9760	1.5136	.7989	1.3365	3.4416	3.9792	1.4784	2.0160	1.2097	1.7473	2.9872	3.5248	1.3536	1.8912	.9696	1.5072
19-35	2.1920	2.8432	.9792	1.6304	.8021	1.4533	3.4448	4.0960	1.4816	2.1328	1.2129	1.8641	2.9904	3.6416	1.3568	2.0080	.9728	1.6240
21-11	2.7456	3.4640	1.3088	2.0272	1.1088	1.8272	3.9712	4.6896	1.8128	2.5312	1.6128	2.3312	3.4448	4.1632	1.7344	2.5312	1.3039	1.8710
21-16	2.6784	3.3168	1.2416	1.8800	1.0422	1.6806	3.9040	4.5424	1.7456	2.3840	1.4505	2.0889	3.3776	4.0160	1.6672	2.3168	1.2352	1.8736
21-35	2.6672	3.4992	1.2304	2.0624	1.0310	1.8630	3.8928	4.7248	1.7344	2.5664	1.4393	2.2713	3.3664	4.1984	1.6560	2.2309	1.2255	1.8003
21-41	2.6768	3.3600	1.2400	1.9232	1.0406	1.7238	3.9024	4.5856	1.7440	2.4272	1.4489	2.1321	3.3760	3.5792	1.6656	1.8688	1.2336	1.4368
23-21	3.0352	3.8624	1.4496	2.2768	1.2279	2.0551	4.2368	5.0640	1.9440	2.7712	1.6368	2.4640	3.7920	4.6192	1.9216	2.7488	1.4637	2.2896
23-35	3.0240	4.0448	1.4384	2.4592	1.2167	2.2375	4.2256	5.2464	1.9328	2.9536	1.6256	2.6464	3.7808	4.8016	1.9104	2.6087	1.4525	2.1507
23-53	2.8992	3.9072	1.4560	2.4816	1.2343	2.2599	4.2432	5.1088	1.9504	2.8160	1.6432	2.5088	3.7984	4.6640	1.9280	2.7936	1.4672	2.2384
25-4	3.4512	4.4800	1.7312	2.8816	1.4864	2.1904	4.8048	5.8272	2.2016	3.2480	1.9568	2.8720	4.2224	5.2496	2.2128	3.2560	1.7133	2.4163
25-19	3.5312	4.7264	1.8112	3.0064	1.5664	2.7616	4.8848	6.0816	2.2816	3.4784	2.0368	3.2336	4.3024	5.4992	2.2928	3.4896	1.7933	2.7058
25-20	3.8190	4.7150	2.0173	3.1125	1.7733	2.8512	5.1430	6.0380	2.4877	3.5421	2.1872	3.2416	4.4350	5.3300	2.2580	3.0182	1.8288	2.8928
25-35	3.4416	4.6656	1.7216	2.9456	1.4776	2.7016	4.7952	6.0192	2.1920	3.4160	1.8915	3.1155	4.2128	5.4368	2.2032	3.4272	1.7037	2.9277
25-61	3.4304	4.4848	1.7282	2.7648	1.4841	2.5208	4.7840	5.8384	2.1808	3.2352	1.8803	2.9347	4.2016	5.2560	2.1920	3.2464	1.6912	2.7456

All weight measurements are for reference only.

High Vibration Dualok, 38999 Series III Type

Features and Benefits

The Dualok represents the latest in high performance connector designs from Amphenol. Featuring a newly developed locking mechanism, the Dualok plug ensures rock-solid coupling and metal-to-metal bottoming in the most severe vibration environments.

New High Vibration Dualok Connector

DUALOK FEATURES AND BENEFITS INCLUDE:

- Mates with standard D38999 receptacles and utilizes standard D38999 inserts.
- Designed to withstand and stay mated under vibration levels that exceed MIL-DTL-38999 levels
- Dualok stainless steel provides a weight savings of up to 42% compared to standard D38999 stainless steel designs
- Stainless steel, aluminum, composite, or aluminum bronze materials of construction
- Dualok aluminum provides ~ 10% weight reduction over D38999 Aluminum
- Coupling mechanism that does not "settle" under vibration levels exceeding MIL-DTL-38999
- Metal-to-metal bottoming for maximum EMI shielding under extreme vibration

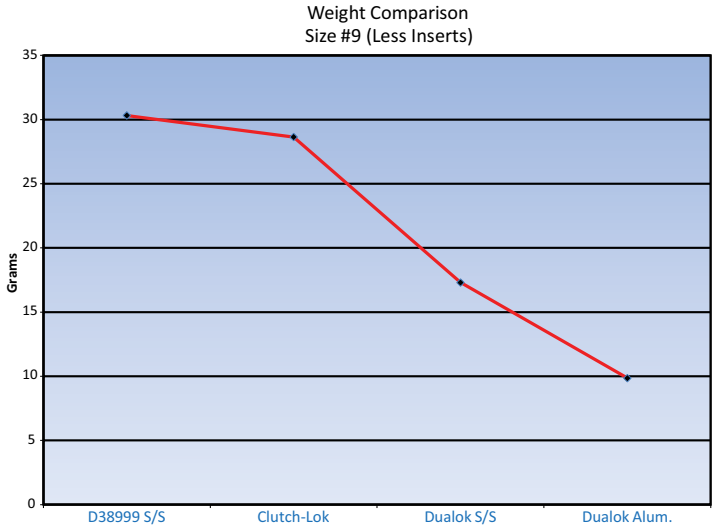

CLUTCH-LOK™ MIL-DTL-38999, SERIES III HIGH VIBRATION CONNECTOR

The Tri-Start option CLUTCH-LOK offers all advantages of stainless steel/Class K firewall for MIL-DTL-38999 Series III connectors, plus a unique clutch design that actually tightens itself under vibration.

Features include:

- High degree of differential torque
- No settling back to the next ratchet tooth
- Completely intermateable with all existing MIL-DTL-38999
- Series III connectors
- Offers advantage in inaccessible, hard to reach areas where mating torque is difficult to apply and complete coupling is not verifiable by inspection

See page 34 for description,
44 – 46 for ordering.

OPTIONAL SHELL GEOMETRIES

Amphenol offers a number of different shell configurations to fit your needs

- Deep Reach Shells - For increased panel thickness
- Stand-off Flange Shells - For attachments to Printed Circuit Boards.
- Connector with Integral Strain Reliefs

High Density Interconnects

HD38999: 9 to 187 Contacts

Amphenol Aerospace

The HD38999 family of connectors has 30% more contact density than the highest density Mil Spec 38999 connectors of its size. This series of connectors was designed to utilize mil-specified 38999 components with the exception of the contacts and inserts arrangement. Utilizing existing mil-qualified 39029 size 23 contacts and 38999 insert materials, these connectors are essentially a drop-in replacement for the standard 38999 connector.

This connector design benefits users in a couple of different ways. For those users who need to increase the amount of contacts in their application, the HD38999 series allows them to do so without increasing the size of their connector. For users who are looking to decrease the overall size of their system, they can do so by using smaller shell sizes without decreasing the number of contacts.

Amphenol has qualified this series of connectors to the requirements of MIL-DTL-38999. Amphenol also manufacturers this high density series in Filter, Hermetic and customized versions to fit our customer's needs. Please contact us if additional information is required.

TECHNICAL DATA

HD38999 series was designed to meet and/or exceed the specifications of MIL-DTL-38999. The connector series has been tested to all the requirements of 38999 with the use of AS39029 size 23 contacts. Test reports are available upon request. The following is a summary of some of the performance requirements.

EMI SHIELDING EFFECTIVENESS:

Solid metal to metal coupling, EMI grounding fingers and conductive finishes have proven to be the ultimate in EMI/EMP shielding effectiveness. The following chart illustrated shielding effectiveness data which is typical in HD38999 connectors.

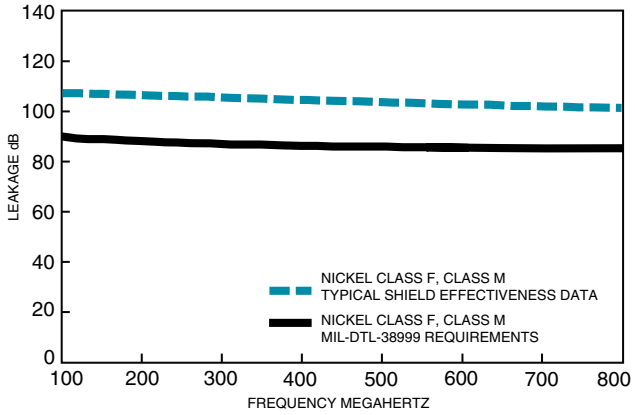

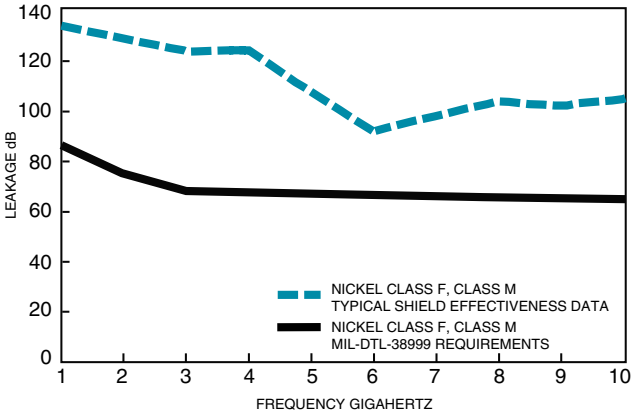

ELECTRICAL:

22 AWG: 5.0 AMPS
24 AWG: 3.0 AMPS
26 AWG: 2.0 AMPS
28 AWG: 1.5 AMPS

Insulation Resistance: 5000 megohms min.@500 VDC 25C
Dielectric Withstanding Voltage: 1000 VRMS@sea level

MECHANICAL:

Metallic Shells:	Material:	Aluminum alloy, Stainless Steel
	Protection:	Electroless Nickel, O.D. Cadmium, Durmalon (Nickel PTFE), Zinc Nickel
Composite Shells:	Material:	Thermoplastic
	Protection:	Electroless Nickel, O.D. Cadmium, Durmalon (Nickel PTFE), Zinc Nickel
Contacts:	Material:	Copper Alloy
	Protection:	Gold over Nickel
Insert Retention to Shell:	100 psi in axial load	
Durability:	500 full mating and unmating cycles	
Vibration:	60G sine per MIL-DTL-38999L Para 4.5.23.2.1 5G2 Random per EIA-364-28E, Test condition A 1G2 Random per EIA-364-28E, Test condition I	
Shock:	Per EIA-364-27B, 300g	

ENVIRONMENTAL:

Operating Temperature:	–65°C to +175°C
Salt Spray: Metallized:	Electroless Nickel: 48 hours Anodic Coating, O. D. Cadmium, Durmalon, Zinc Nickel: 500 hours
Salt Spray Composite:	Electroless Nickel: 1000 hours O. D. Cadmium, Durmalon, Zinc Nickel: 500 hours

Custom Designed HD38999 Connectors and Alignment Disks

NEW CUSTOM DESIGNED HD38999 CONNECTORS - PROVIDE MORE INTERCONNECT SOLUTIONS:

HD38999 High Density

ALIGNMENT DISKS

Alignment disks keep contacts aligned for easier insertion into circuit boards. These are typically ordered with the connector - see step 7 of How to Order on page 47.

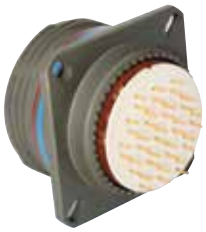

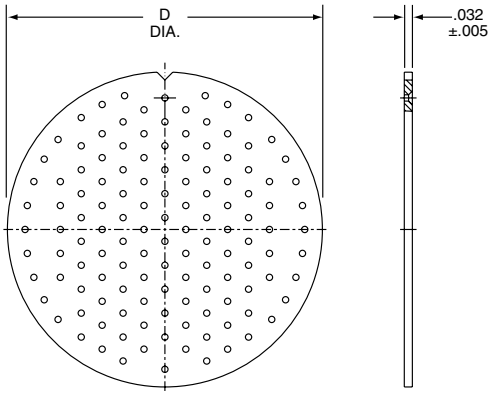

Shell Size	D Dia. ±.010
9	.234
11	.350
13	.500
15	.725
17	.750
19	.850
21	.953
23	1.147
25	1.250

FILTERED HD38999 CONNECTORS - FOR EMI/EMP PROTECTION

High density patterns are available in filter 38999 connectors - consult Amphenol Aerospace for ordering.

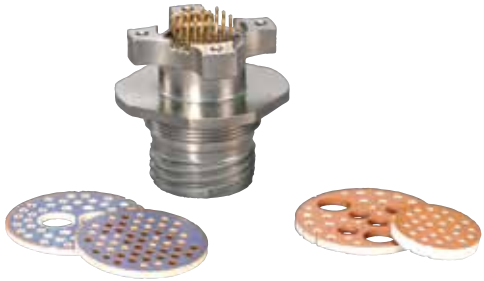

HD38999 FOR GIGABIT ETHERNET APPLICATIONS

The HD38999 is available for high speed (Gigabit Ethernet) data transmission in the size 9-9 insert pattern.

Data transmission performance of this connector insert:

- 10 Base T, 100 Base TX, and 1000 Base T networks using Cat 5e per TIA/EIA568B and Class D per ISO/IEC 11801.
  (Test report available - consult Amphenol Aerospace for more information)

Signal-Ground Pin Configuration Wiring Recommendations

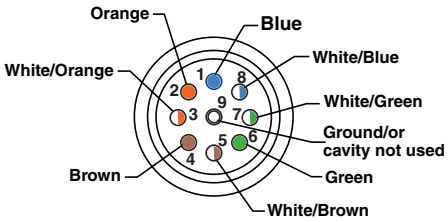

View Rear of Connector

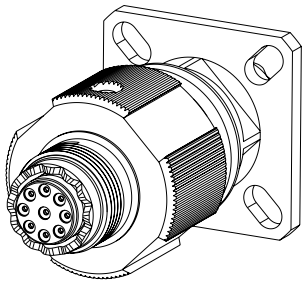

HD38999 Connector with 9-9 Insert Pattern (Rear View)

MIL-DTL-38999, Series III TV, Configurator

Online at www.amphenol-aerospace.com

Amphenol Aerospace

Now you can build a part number for Military and Commercial MIL-DTL-38999 Series III through our online configurator, located on the home page of www.amphenol-aerospace.com.

After building a part number, you have the option to download the drawing and specifications, buy if available through distribution channels, Request a Quote and the ability to download multiple part numbers to a list to manage your needs.

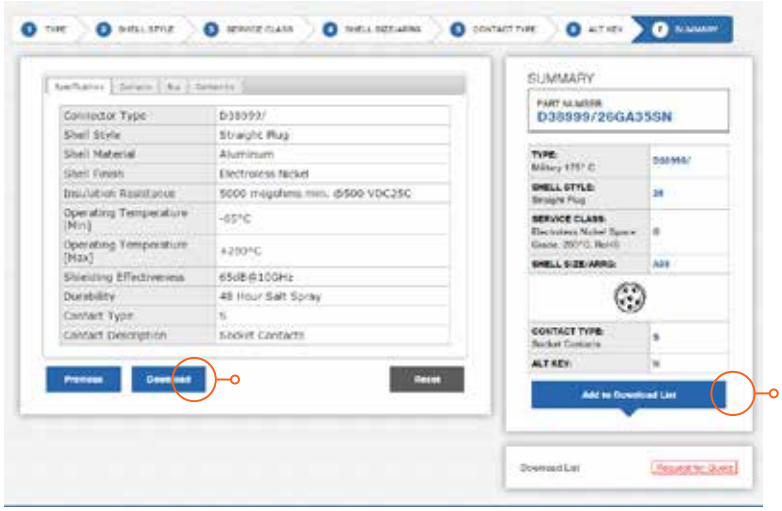

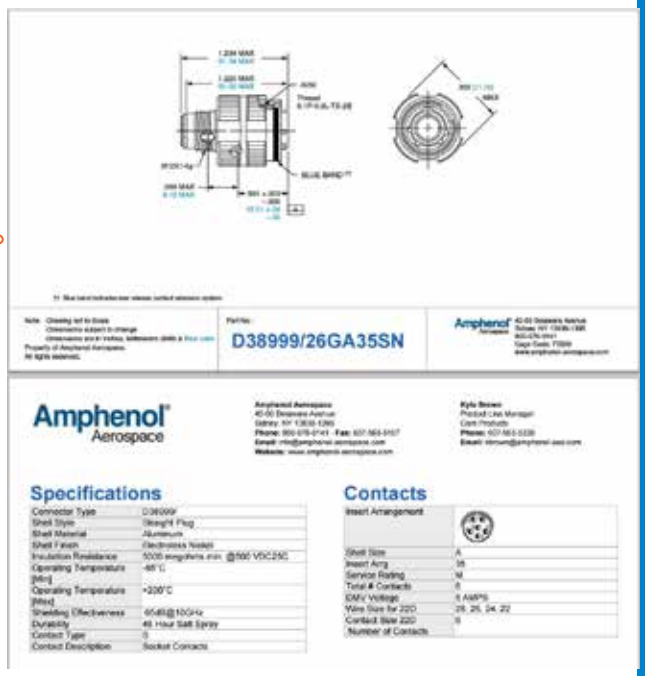

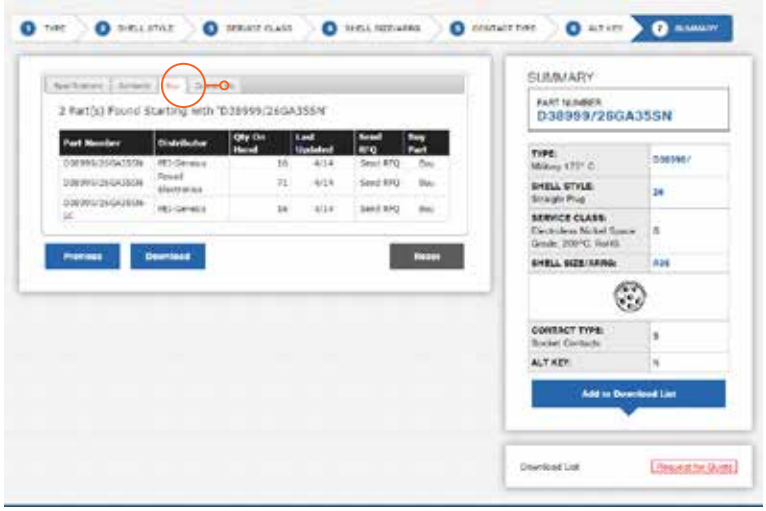

Military to Commercial Shell Style Conversion Table

How to Order (Military)

MILITARY	DESCRIPTION	COMMERCIAL
D38999/20	Wall Mounting Receptacle	TVP00 or TVPS00 (AL & SS); CTVP00, CTVPS00 (Composite)
D38999/21	Hermetic Box Mounting Receptacle	TVPS02Y, TVPS02YN
D38999/23	Hermetic Jam Nut Receptacle	TVS07Y, TVS07YN
D38999/24	Jam Nut Receptacle	TV07, TVS07 (AL & SS); CTV00, CTVS00 (Composite)
D38999/26	Straight Plug	TV06, TVS06
D38999/25	Solder Mount Receptacle (Hermetic)	TVSI
D38999/27	Weld Mounted Receptacle (Hermetic)	TVSHI

HOW TO ORDER: MILITARY

1. Connector Type	2. Shell Style	3. Service Class	4. Shell Size– Insert Arrangement	5. Contact Type	6. Alternate Keying Position
D38999/	20	J	G35	P	N

1. CONNECTOR TYPE

38999/	MIL-DTL-38999 III

2. SHELL STYLE

20	Wall Mount Receptacle
21	Box Mount Receptacle Hermetic
26	Straight Plug
24	Jam Nut Receptacle
23	Jam Nut Receptacle Hermetic
25	Solder Mount Receptacle Hermetic
27	Weld Mounted Receptacle, **(Hermetic)** Only

3. SERVICE CLASS

Military	Finish	RoHS	Material	Material/ Description
C	Anodic Coating	■	Aluminum	200°C, 500 hour salt spray
F	Electroless Nickel	■	Aluminum	200°C, EMI shielding –65dB @ 10GHz, 48 hour salt spray
G	Electroless Nickel	■	Aluminum	200°C, Space grade, 48 hour salt spray
J	Olive Drab Cadmium		Composite	175°C, 2000 hours dynamic salt spray, EMI Shielding –50 dB@10 GHz specification min.
K	Passivated Stainless Steel	■	Stainless Steel	200°C, firewall capability, 500 hour salt spray resistance, EMI –45 dB @ 10 GHz specification min.
L	Stainless Steel w/ Nickel Plate	■	Stainless Steel	Corrosion resistant steel, 200°C, 500 hour salt spray, , non firewall, EMI shielding –65dB @ 10GHz specification min.
M	Electroless Nickel	■	Composite	200°C, EMI shielding –65dB @ 10GHz, 2000 hours dynamic salt spray
N	Stainless Steel w/ Nickel Plate	■	Stainless Steel	Hermetic connectors, corrosion resistant steel, 200°C
S	Stainless Steel w/ Nickel Plate	■	Stainless Steel	Non-hermetic connectors, corrosion resistant steel, 200°, firewall capability, 500 hour salt spray, EMI shielding –65dB @ 10GHz specification min.
T	Durmalon plated	■	Aluminum	Nickel-PTFE alternative to Cadmium, 175°C, 500 hour salt spray, EMI -50dB at 10GHz specification min.
W	Olive Drab Cadmium		Aluminum	175°C , 500 hour salt spray, EMI Shielding –50 dB@10 GHz specification min.
Y	Stainless Steel	■	Stainless Steel	Hermetic seal, 200°C passivated stainless steel
Z	Zinc-Nickel Plated	■	Aluminum	Zinc-Nickel Alternative to Cadmium, +175°C, 500 hour salt spray, EMI Shielding –50 dB @ 10 GHz specification min.

4. SELECT A SHELL SIZE & INSERT ARRANGEMENT SEE PAGES 2-5

Shell Size & Insert Arrangements are on pages 2-5. First number represents Shell Size, second number is the Insert Arrangement.

Triple Start Threads									
A	B	C	D	E	F	G	H	J	Mil Shell Size
9	11	13	15	17	19	21	23	25	Amphenol Shell size

5. CONTACT TYPE

P	500 Cycle Pin Contacts, if require Less Contacts place (LC) at the end of part number
S	500 Cycle Socket Contacts, if require Less Contacts place (LC) at the end of part number
H	1500 Pin Cycle Contacts
J	1500 Socket Cycle Contacts
A	Less Pin Contacts
B	Less Socket Contacts
X	Eyelet contacts, hermetics only

6. ALTERNATE KEY POSITION

Key/Keyway Position					
N	A	B	C	D	E

KEY/KEYWAY POSITION

A plug with a given rotation letter will mate with a receptacle with the same rotation letter. The angles for a given connector are the same whether it contains pins or sockets. Master key stays fixed, minor keys rotate. Inserts are not rotated in conjunction with the master key/keyway.

RECEPTACLE
(front face shown)

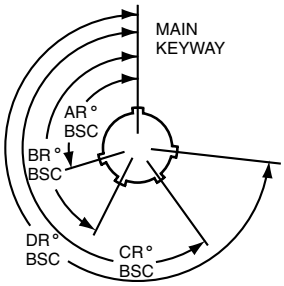

PLUG
(front face shown)

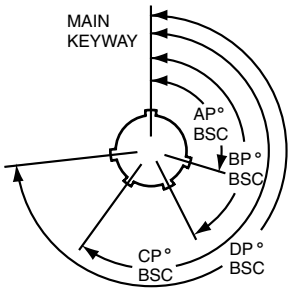

Shell Size	Key & Keyway Arrangement Identification Letter	AR° or AP° BSC	BR° or BP° BSC	CR° or CP° BSC	DR° or DP° BSC
A (9)	N*	105	140	215	265
	A	102	132	248	320
	B	80	118	230	312
	C	35	140	205	275
	D	64	155	234	304
	E	91	131	197	240
B (11) C (13) D (15)	N*	95	141	208	236
	A	113	156	182	292
	B	90	145	195	252
	C	53	156	220	255
	D	119	146	176	298
	E	51	141	184	242
E (17) F (19)	N*	80	142	196	293
	A	135	170	200	310
	B	49	169	200	244
	C	66	140	200	257
	D	62	145	180	280
	E	79	153	197	272
G (21) H (23) J (25)	N*	80	142	196	293
	A	135	170	200	310
	B	49	169	200	244
	C	66	140	200	257
	D	62	145	180	280
	E	79	153	197	272

MIL-DTL-38999, Series III TV

How to Order (Commercial)

1. SELECT A TYPE & CLASS

1. Type & Class	2. Shell Size-Insert Arrg.	3. Contact Type	4. Alternate Position	5. PCB Length**
TVPS00RB-				

** If Required

		ALUMINUM						
		Electroless Nickel	Olive Drab Cadmium	Durmalon	Black Zinc	Electroless Nickel (With Ground Plane)	Olive Drab Cadmium (With Ground Plane)	Marine Bronze
RATES	Temperature	200˚C	175˚C	175˚C	175˚C	200˚C	175˚C	200˚C
	Salt Spray	48 Hrs	500 Hrs	500 Hrs	500 Hrs	48 Hrs	500 Hrs	2,000 Hrs
	EMI Shielding	-65dB @ 10GHz	-65dB @ 10GHz	-50dB @ 10GHz	-50dB @ 10GHz	-65dB @ 10GHz	-65dB @ 10GHz	-65dB @ 10GHz
	RoHS	✓		✓	✓	✓		
CONNECTOR TYPE & STYLE – Receptacle	Wall Mounting Receptacle	TVPS00RF-	TVP00RW-	TVP00DT-	TVP00DZ-	TVP00RGF-	TVP00RGW-	TVPS00RB-
	Box Mounting Receptacle	TVPS02RF-	TVP02RW-	TVP02DT-	TVP02DZ-	TVP02RGF-	TVP02RGW-	TVPS02RB-
	Line Receptacle	TVS01RF-	TV01RW-	TV01DT-	TV01DZ-	TV01RGF-	TV01RGW-	TVS01RB-
	Jam Nut Receptacle	TVS07RF-	TV07RW-	TV07DT-	TV07DZ-	TV07RGF-	TV07RGW-	TVS07RB-
CONNECTOR TYPE & STYLE – Plugs	Straight Plug	TVS06RF-	TV06RW-	TV06DT-	TV06DZ-	TV06RGF-	TV06RGW-	TVS06RB-
	Flange Mounted Plug	TVS09RF-	TV09RW-	TV09DT-	TV09DZ-	TV09RGF-	TV09RGW-	TVS09RB-
	Straight Plug w Dualok	TVS56RF-	TV56RW-	TV56DT-	TV56DZ-	TV56RGF-	TV56RGW-	TVS56RB-
	Straight Plug w Clutch-Lok*	-	-	-	-	-	-	-
CONNECTOR TYPE & STYLE – Printed Circuit Board	Wall Mounting Receptacle	TVPS00RF-	TVP00RW-	TVP00DT-	TVP00DZ-	-	-	TVPS00RB-
	Box Mounting Receptacle	TVPS02RF-	TVP02RW-	TVP02DT-	TVP02DZ-	-	-	TVPS02RB-
	Jam Nut	TVS07RF-	TV07RW-	TV07DT-	TV07DZ-	-	-	TVS07RB-
	Wall Mount (Double Flange)	TVPS40RF-	TVP40RW-	TVP40DT-	TVP40DZ-	-	-	TVPS40RB-
	Jam Nut (Double Flange)	TVS47RF-	TV47RW-	TV47DT-	TV47DZ-	-	-	TVS47RB-
	Wall Mount (Clinch Nuts)	TVPS10RF-	TVP10RW-	TVP10DT-	TVP10DZ-	-	-	TVPS10RB-
	Box Mount (Clinch Nuts)	TVPS12RF-	TVP12RW-	TVP12DT-	TVP12DZ-	-	-	TVPS12RB-
Hermetic	Box Mounting Receptacle	Hermetic only available in Stainless Steel						
	Jam Nut Receptacle							
	Solder Mount							
	Wall Mounting Receptacle							

* Stamped with Mil-Spec #D38999

Insert arrangements using multi-axial (i.e. coax, twinax, triax shielded) contacts should not be used in firewall applications.
*Coaxial arrangements are not available in firewall classes.

Wall Mount Receptacle (00, 20)

Line Receptacle (01)

Box Mount Receptacle (02, 21)

Straight Plug (06)

Jam Nut Receptacle (07, 24)

Flange Mounting Plug (09)

Deep Reach Receptacle
Consult Amphenol Aerospace

Solder Mount Hermetic Receptacle (I, 25)

Lanyard Release Plug (29, 30, 31)

How to Order (Commercial)

COMPOSITE				STAINLESS STEEL			
Electroless Nickel	Olive Drab Cadmium	Electroless Nickel (With Ground Plane)	Olive Drab Cadmium (With Ground Plane)	Passivated (Firewall)	Passivated (Non-Firewall)	Nickel Plated (Firewall)	Nickel Plated (Non-Firewall)
200°C	175°C	200°C	175°C	200°C	200°C	200°C	200°C
2,000 Hrs	2,000 Hrs	2,000 Hrs	2,000 Hrs	500 Hrs	500 Hrs	500 Hrs	500 Hrs
-65dB @ 10GHz	-65dB @ 10GHz	-65dB @ 10GHz	-65dB @ 10GHz	-65dB @ 10GHz	-65dB @ 10GHz	-65dB @ 10GHz	-50dB @ 10GHz
CTVPS00RF-	CTVP00RW-	CTVP00RGF-	CTVP00RGW-	TVPS00RK-	TVPS00RKN-	TVPS00RS-	TVPS00RL-
CTVPS02RF-	CTVP02RW-	CTVP02RGF-	CTVP02RGW-	TVPS02RK-	TVPS02RKN-	TVPS02RS-	TVPS02RL-
CTVS01RF-	CTV01RW-	CTV01RGF-	CTV01RGW-	TVS01RK-	TVS01RKN-	TVS01RS-	TVS01RL-
CTVS07RF-	CTV07RW-	CTV07RGF-	CTV07RGW-	TVS07RK-	TVS07RKN-	TVS07RS-	TVS07RL-
CTVS06RF-	CTV06RW-	CTV06RGF-	CTV06RGW-	TVS06RK-	TVS06RKN-	TVS06RS-	TVS06RL-
CTVS09RF-	CTV09RW-	CTV09RGF-	CTV09RGW-	TVS09RK-	TVS09RKN-	TVS09RS-	TVS09RL-
CTVS56RF-	CTV56RW-	CTV56RGF-	CTV56RGW-	TVS56RK-	TVS56RKN-	TVS56RS-	TVS56RL-
-	-	-	-	MTVS26RK-	-	-	-
				TVPS00RK-	TVPS00RKN-	TVPS00RS-	TVPS00RL-
				TVPS02RK-	TVPS02RKN-	TVPS02RS-	TVPS02RL-
				TVS07RK-	TVS07RKN-	TVS07RS-	TVS07RL-
				TVPS40RK-	TVPS40RKN-	TVPS40RS-	TVPS40RL-
				TVS47RK-	TVS47RKN-	TVS47RS-	TVS47RL-
				TVPS10RK-	TVPS10RKN-	TVPS10RS-	TVPS10RL-
				TVPS12RK-	TVPS12RKN-	TVPS12RS-	TVPS12RL-
Hermetic only available in Stainless Steel				-	TVPS02Y-	-	TVPS02YN-
				-	TVS07Y-	-	TVS07YN-
				-	TVSIY-	-	TVSIYN-
				-	TVSHIY-	-	TVSHIYN-

1. Type & Class	2. Shell Size-Insert Arrg.	3. Contact Type	4. Alternate Position	5. PCB Length**
	11-4	P		

** If Required

2. SELECT A SHELL SIZE & INSERT ARRANGEMENT SEE PAGES 2-5

Shell Size & Insert Arrangements are on pages 2-5. First number represents Shell Size, second number is the Insert Arrangement.
* Size 7 and 7H are Double Start Threads only

3. CONTACT TYPE

P	500 Cycle Pin Contacts, if require Less Contacts place (LC) at the end of part number
S	500 Cycle Socket Contacts, if require Less Contacts place (LC) at the end of part number
H	1500 Cycle Pin Contacts
J	1500 Cycle Socket Contacts
X	Eyelet contacts, hermetics only

MIL-DTL-38999, Series III TV

How to Order (Alternate Keying) Commercial

1. Type & Class	2. Shell Size-Insert Arrg.	3. Contact Type	4. Alternate Position	5. PCB Length**
			N	

4. SELECT A ALTERNATE KEYING COMMERCIAL

Shell Size	Key & Keyway Arrangement Identification Letter	AR° or AP° BSC	BR° or BP° BSC	CR° or CP° BSC	DR° or DP° BSC
7, 7H	N*	120	240	NA	NA
	A	132	248		
	B	80	230		
	C	140	275		
	D	155	234		
	E	131	197		
9	N*	105	140	215	265
	A	102	132	248	320
	B	80	118	230	312
	C	35	140	205	275
	D	64	155	234	304
	E	91	131	197	240
11, 13, and 15	N*	95	141	208	236
	A	113	156	182	292
	B	90	145	195	252
	C	53	156	220	255
	D	119	146	176	298
	E	51	141	184	242
17 and 19	N*	80	142	196	293
	A	135	170	200	310
	B	49	169	200	244
	C	66	140	200	257
	D	62	145	180	280
	E	79	153	197	272
21, 23, and 25	N*	80	142	196	293
	A	135	170	200	310
	B	49	169	200	244
	C	66	140	200	257
	D	62	145	180	280
	E	79	153	197	272
25L, 33, and 37	N*	80	142	188	293
	A	135	170	188	310
	B	49	169	188	244
	C	66	140	188	257
	D	62	145	188	280
	E	79	153	188	272

** An "N" designation is used on D38999 military part number but not on the commercial versions*

KEY/KEYWAY POSITION

A plug with a given rotation letter will mate with a receptacle with the same rotation letter. The angles for a given connector are the same whether it contains pins or sockets. Master key stays fixed, minor keys rotate. Inserts are not rotated in conjunction with the master key/keyway.

RECEPTACLE (FRONT FACE SHOWN)

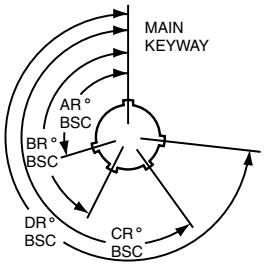

PLUG (FRONT FACE SHOWN)

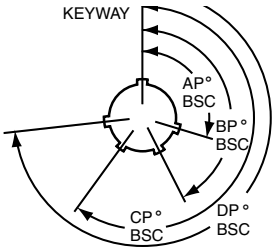

Alignment Disc

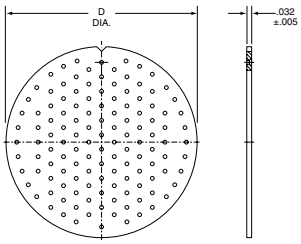

Shell Size	D Dia. ±.010
9	.234
11	.350
13	.500
15	.725
17	.750
19	.850
21	.953
23	1.147
25	1.250

5. PCB LENGTH FOR COMMERCIAL ONLY

** If Required

Contact Stickout	Pin Contacts	Pin Contacts with Alignment Disk
.150"	(P15)	(P15AD)
.250"	(P25)	(P25AD)
.350"	(P35)	(P35AD)

Contact Stickout	Socket Contacts	Socket Contacts with Alignment Disk
.150"	(S15)	(S15AD)
.250"	(S25)	(S25AD)
.350"	(S35)	(S35AD)

5. PCB LENGTH FOR HD38999 ONLY

9-9, 11-19, 13-32, 15-55, 17-73, 19-88, 21-121, 23-151, 25-187

PCB tail stickout +/-.040 inch	Without Alignment Disk		With Alignment Disc	
	Pins	Sockets	Pins	Sockets
.100" nominal	(P1*)	(S1)	(P1AD)	(S1AD)
.150" nominal	(P15*)	(S15)	(P15AD)	(S15AD)
.200" nominal	(P2)	(S2)	(P2AD)	(S2AD)
.250" nominal	(P25*)	(S25)	(P25AD)	(S25AD)
.300" nominal	(P3*)	(S3)	(P3AD)	(S3AD)
.350" nominal	(P35)	(S35)	(P35AD)	(S35AD)

* Not available in TV40 wall mount double flange receptacle or TV47 jam nut double flange receptacle styles.
Note: Standard tail diameter is 0.019±.001 Stick out is measured from the end of the connector shell to end of the contact

Amphenol Aerospace

HOW TO ORDER - BOEING BACC63 CT & CU

1. Boeing Basic Number	2. Style	3. Shell Size	4. Shell Finish & Contact	5. Insert Arrangement	6. Contact Type	7. Alternate Keying Position	8. Ordering Option
BACC63	CT	15	–	19	P	N	H

COMPOSITE

1. BOEING NUMBER

BACC63	Boeing

2. STYLE

CT	Composite Plug
CU	Composite Receptacle

3. SHELL SIZE

15	One Shell Size

4. SHELL FINISH & CONTACT

C	CT Style Only. Cadmium Plated, Grounded
D	Cadmium Plated, ungrounded
G	Nickel Plated, Grounded
–	Nickel Plated, Ungrounded

5. INSERT ARRANGEMENTS-

Consult Amphenol Aerospace for insert arrangements available.

6. CONTACT TYPE

P	Pin
S	Socket

7. ALTERNATE KEYING POSITION

N	Normal
A-E	Alternates

8. ORDERING OPTIONS

H	Without Contacts & Seal Plugs
Blank	With Contacts & Seal Plugs

HOW TO ORDER - BOEING BACC63 DB & DC

1. Boeing Basic Number	2. Style	3. Shell Size-Insert Arrangement	4. Contact Type	5. Alternate Keying Position	6. Ordering Option
BACC63	DB	15-19	P	N	H
BACC63	DC	17-8	P	N	H

STAINLESS STEEL

1. BOEING NUMBER

BACC63	Boeing

2. SELECT A STYLE

DB	Stainless Steel Plug
DC	Stainless Steel Receptacle

3. SELECT A SHELL SIZE & INSERT ARRANGEMENT SEE PAGES 2-5

Shell Size & Insert Arrangements are on pages 2-5. First number represents Shell Size, second number is the Insert Arrangement. Please include the dash.

4. CONTACT TYPE

P	Pin
S	Socket

5. ALTERNATE KEYING POSITION

N	Normal
A-E	Alternates

6. ORDERING OPTION

H	Without Contacts & Seal Plugs
Blank	With Contacts & Seal Plugs

Wall Mounting Receptacle

Military (D38999/20), Commercial (TVP00, TVPS00, CTVP00, CTVPS00)

PART NUMBER BUILDER Page 42-46
ONLINE CONFIGURATOR www.amphenol-aerospace.com

MILITARY
D38999/20

Commercial

ALUMINUM
TVPS00RF
TVP00RW
TVP00DT
TVP00DZ
TVP00RGF
TVP00RGW
TVPS00RB

COMPOSITE
CTVPS00RF
CTVP00RW
CTVP00RGF
CTVP00RGW

STAINLESS STEEL
TVPS00RK
TVPS00RKN
TVPS00RS
TVPS00RL

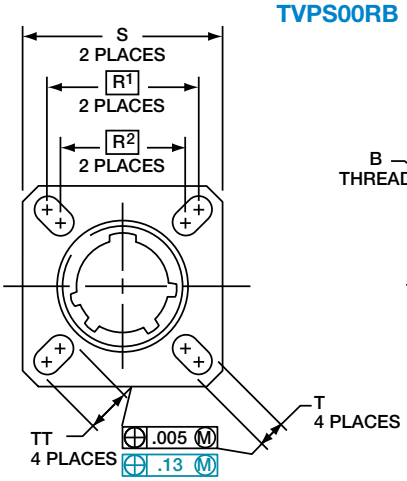

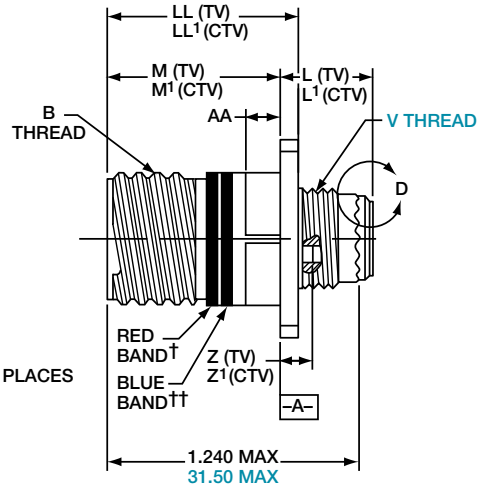

VIEW D
FOR SIZE 8 COAXIAL ONLY,
RELATIVE TO –A–

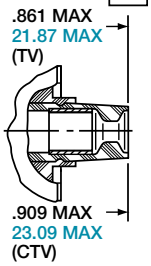

VIEW D
FOR SIZE 8 TWINAX ONLY,
RELATIVE TO –A–

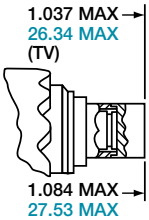

PANEL HOLE DIMENSIONS

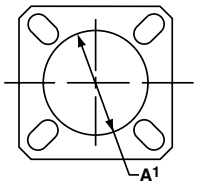

BACK PANEL MOUNTING

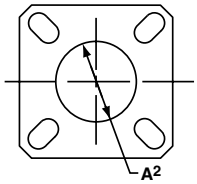

FRONT PANEL MOUNTING

† Red band indicates fully mated
†† Blue band indicates rear release contact retention system

Inches

Shell Size	MS Shell Size Code	B Thread Class 2A 0.1P=0.3L-TS (Plated)	L Max. (TV)	L1 Max. (CTV)	M +.000 –.005 (TV)	M1 +.000 –.005 (CTV)	R1	R2	S Max.	T ±.008	Z. Max. (TV)	Z1 Max. (CTV)	A1 Back Panel Mount	A2 Front Panel Mount	AA Max. Panel Thickness	LL +.006 –.000 (TV)	LL1 ±.005 (CTV)	TT ±.008
9	A	.6250	.469	.514	.820	.773	.719	.594	.948	.128	.153	.198	.655	.516	.234	.905	.908	.216
11	B	.7500	.469	.514	.820	.773	.812	.719	1.043	.128	.153	.198	.796	.625	.234	.905	.908	.194
13	C	.8750	.469	.514	.820	.773	.906	.812	1.137	.128	.153	.198	.922	.750	.234	.905	.908	.194
15	D	1.0000	.469	.514	.820	.773	.969	.906	1.232	.128	.153	.198	1.047	.906	.234	.905	.908	.173
17	E	1.1875	.469	.514	.820	.773	1.062	.969	1.323	.128	.153	.198	1.219	1.016	.234	.905	.908	.194
19	F	1.2500	.469	.514	.820	.773	1.156	1.062	1.449	.128	.153	.198	1.297	1.141	.234	.905	.908	.194
21	G	1.3750	.500	.545	.790	.741	1.250	1.156	1.575	.128	.183	.228	1.442	1.266	.204	.905	.904	.194
23	H	1.5000	.500	.545	.790	.741	1.375	1.250	1.701	.154	.183	.228	1.547	1.375	.204	.905	.904	.242
25	J	1.6250	.500	.545	.790	.741	1.500	1.375	1.823	.154	.183	.228	1.672	1.484	.204	.905	.904	.242

Millimeters

Shell Size	MS Shell Size Code	L Max. (TV)	L1 Max. (CTV)	M +.00 –.13 (TV)	M1 +.00 –.13 (CTV)	R1	R2	S Max.	T ±.20	V Thread Metric	Z. Max. (TV)	Z1 Max. (CTV)	A1 Back Panel Mount	A2 Front Panel Mount	AA Max.	LL +.15 –.00 (TV)	LL1 ±.13 (CTV)	TT ±.20
9	A	11.91	13.06	20.83	19.63	18.26	15.09	24.1	3.25	M12X1-6g	3.89	5.03	16.66	13.11	5.94	22.99	23.06	5.49
11	B	11.91	13.06	20.83	19.63	20.62	18.26	26.5	3.25	M15X1-6g	3.89	5.03	20.22	15.88	5.94	22.99	23.06	4.93
13	C	11.91	13.06	20.83	19.63	23.01	20.62	28.9	3.25	M18X1-6g	3.89	5.03	23.42	19.05	5.94	22.99	23.06	4.93
15	D	11.91	13.06	20.83	19.63	24.61	23.01	31.3	3.25	M22X1-6g	3.89	5.03	26.59	23.01	5.94	22.99	23.06	4.39
17	E	11.91	13.06	20.83	19.63	26.97	24.61	33.7	3.25	M25X1-6g	3.89	5.03	30.96	25.81	5.94	22.99	23.06	4.93
19	F	11.91	13.06	20.83	19.63	29.36	26.97	36.9	3.25	M28X1-6g	3.89	5.03	32.94	28.98	5.94	22.99	23.06	4.93
21	G	12.70	13.84	20.07	18.82	31.75	29.36	40.1	3.25	M31X1-6g	4.65	5.79	36.12	32.16	5.18	22.99	22.96	4.93
23	H	12.70	13.84	20.07	18.82	34.93	31.75	43.3	3.91	M34X1-6g	4.65	5.79	39.29	34.93	5.18	22.99	22.96	6.15
25	J	12.70	13.84	20.07	18.82	38.10	34.93	46.4	3.91	M37X1-6g	4.65	5.79	42.47	37.69	5.18	22.99	22.96	6.15

All dimensions for reference only

☐ Designates true position dimensioning

Box Mounting Receptacle

Commercial (TVP02, TVPS02, CTVP02, CTVPS02)

Amphenol Aerospace

PART NUMBER BUILDER Page 44-46
ONLINE CONFIGURATOR www.amphenol-aerospace.com

Commercial

ALUMINUM	COMPOSITE	STAINLESS STEEL
TVPS02RF	CTVPS02RF	TVPS02RK
TVP02RW	CTVP02RW	TVPS02RKN
TVP02DT	CTVP02RGF	TVPS02RS
TVP02DZ	CTVP02RGW	TVPS02RL
TVP02RGF		
TVP02RGW		
TVPS02RB		

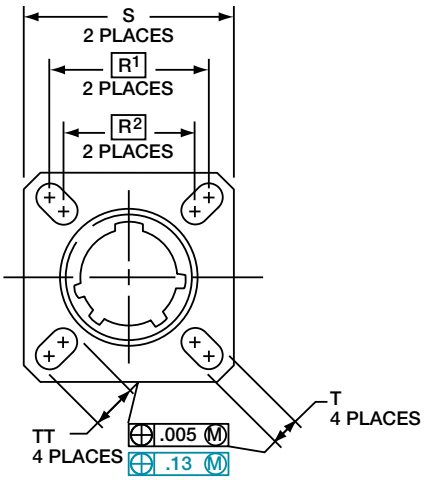

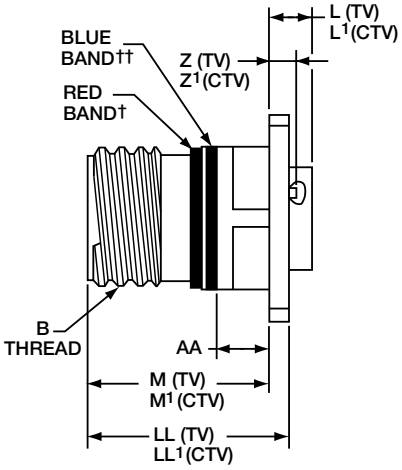

PANEL HOLE DIMENSIONS

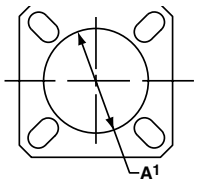

BACK PANEL MOUNTING

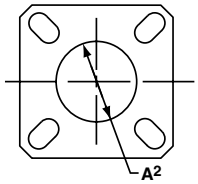

FRONT PANEL MOUNTING

† Red band indicates fully mated
†† Blue band indicates rear release contact retention system

Consult Amphenol Aerospace for availability of composite box mount receptacles.

Inches

Shell Size	MS Shell Size Code	B Thread Class 2A 0.1P=0.3L-TS (Plated)	L Max. (TV)	L1 Max. (CTV)	M +.000 –.005 (TV)	M1 +.000 –.005 (CTV)	R1	R2	S Max.	T ±.008	Z. Max. (TV)	Z1 Max. (CTV)	A1 Back Panel Mount	A2 Front Panel Mount	AA Max. Panel Thickness	LL +.006 –.000 (TV)	LL1 ±.005 (CTV)	TT ±.008
9	A	.6250	.205	.250	.820	.773	.719	.594	.948	.128	.153	.198	.650	.510	.234	.905	.908	.216
11	B	.7500	.205	.250	.820	.773	.812	.719	1.043	.128	.153	.198	.800	.620	.234	.905	.908	.194
13	C	.8750	.205	.250	.820	.773	.906	.812	1.137	.128	.153	.198	.910	.740	.234	.905	.908	.194
15	D	1.0000	.205	.250	.820	.773	.969	.906	1.232	.128	.153	.198	1.040	.900	.234	.905	.908	.173
17	E	1.1875	.205	.250	.820	.773	1.062	.969	1.323	.128	.153	.198	1.210	1.010	.234	.905	.908	.194
19	F	1.2500	.205	.250	.820	.773	1.156	1.062	1.449	.128	.153	.198	1.280	1.130	.234	.905	.908	.194
21	G	1.3750	.235	.280	.790	.741	1.250	1.156	1.575	.128	.183	.228	1.410	1.250	.204	.905	.904	.194
23	H	1.5000	.235	.280	.790	.741	1.375	1.250	1.701	.154	.183	.228	1.530	1.360	.204	.905	.904	.242
25	J	1.6250	.235	.280	.790	.741	1.500	1.375	1.823	.154	.183	.228	1.660	1.470	.204	.905	.904	.242

Millimeters

Shell Size	MS Shell Size Code	L Max. (TV)	L1 Max. (CTV)	M +.00 –.13 (TV)	M1 +.00 –.13 (CTV)	R1	R2	S Max.	T ±.20	Z. Max. (TV)	Z1 Max. (CTV)	A1 Back Panel Mount	A2 Front Panel Mount	AA Max.	LL +.15 –.00 (TV)	LL1 ±.13 (CTV)	TT ±.20
9	A	5.21	6.35	20.83	19.63	18.26	15.09	24.1	3.25	3.89	5.03	16.66	13.11	5.94	22.99	23.06	5.49
11	B	5.21	6.35	20.83	19.63	20.62	18.26	26.5	3.25	3.89	5.03	20.22	15.88	5.94	22.99	23.06	4.93
13	C	5.21	6.35	20.83	19.63	23.01	20.62	28.9	3.25	3.89	5.03	23.42	19.05	5.94	22.99	23.06	4.93
15	D	5.21	6.35	20.83	19.63	24.61	23.01	31.3	3.25	3.89	5.03	26.59	23.01	5.94	22.99	23.06	4.39
17	E	5.21	6.35	20.83	19.63	26.97	24.61	33.7	3.25	3.89	5.03	30.96	25.81	5.94	22.99	23.06	4.93
19	F	5.21	6.35	20.83	19.63	29.36	26.97	36.9	3.25	3.89	5.03	32.94	28.98	5.94	22.99	23.06	4.93
21	G	5.97	7.11	20.07	18.82	31.75	29.36	40.1	3.25	4.65	5.79	36.12	32.16	5.18	22.99	22.96	4.93
23	H	5.97	7.11	20.07	18.82	34.92	31.75	43.3	3.91	4.65	5.79	39.29	34.93	5.18	22.99	22.96	6.15
25	J	5.97	7.11	20.07	18.82	38.10	34.92	46.4	3.91	4.65	5.79	42.47	37.69	5.18	22.99	22.96	6.15

All dimensions for reference only

☐ Designates true position dimensioning

Line Receptacle

Commercial (TV01, TVS01, CTV01, CTVS01)

PART NUMBER BUILDER Page 44-46
ONLINE CONFIGURATOR www.amphenol-aerospace.com

Commercial

ALUMINUM	COMPOSITE	STAINLESS STEEL
TVS01RF	CTVS01RF	TVS01RK
TV01RW	CTV01RW	TVS01RKN
TV01DT	CTV01RGF	TVS01RS
TV01DZ	CTV01RGW	TVS01RL
TV01RGF		
TV01RGW		
TVS01RB		

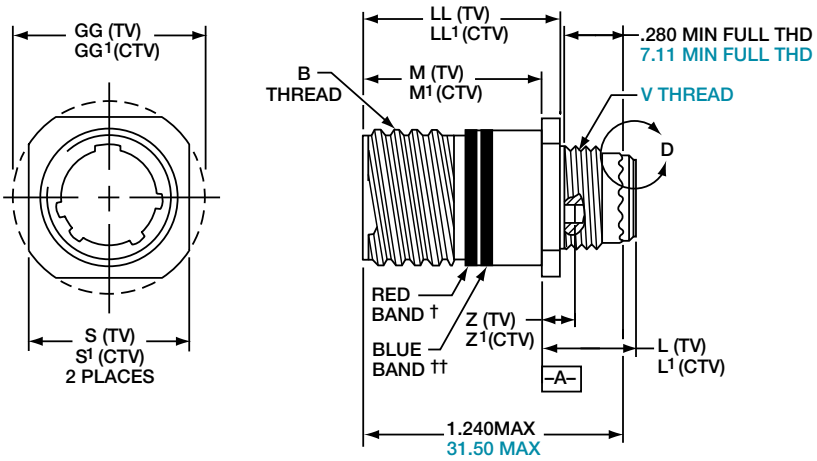

† Red band indicates fully mated
†† Blue band indicates rear release contact retention system

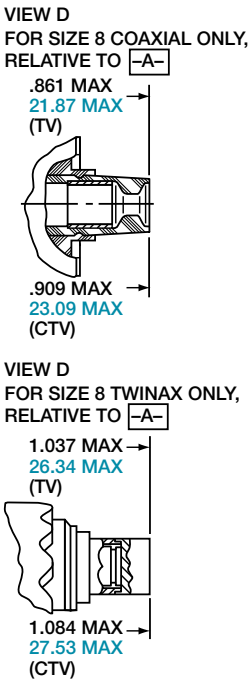

Inches

Shell Size	MS Shell Size Code	B Thread 0.1P-0.3L-TS-2A (Plated)	M +.000 –.005 (TV)	M1 +.000 –.005 (CTV)	L Max. (TV)	L1 Max. (CTV)	S ±.010 (TV)	S1 ±.010 (CTV)	Z Max (TV)	Z1 Max (CTV)	GG ±.010 (TV)	GG1 ±.010 (CTV)	LL +.006 –.000 (TV)	LL1 ±.005 (CTV)
9	A	.6250	.820	.773	.469	.514	.675	.635	.153	.198	.812	.699	.905	.908
11	B	.7500	.820	.773	.469	.514	.800	.765	.153	.198	.905	.875	.905	.908
13	C	.8750	.820	.773	.469	.514	.925	.885	.153	.198	1.093	1.007	.905	.908
15	D	1.0000	.820	.773	.469	.514	1.050	1.100	.153	.198	1.219	1.140	.905	.908
17	E	1.1875	.820	.773	.469	.514	1.238	1.197	.153	.198	1.375	1.229	.905	.908
19	F	1.2500	.820	.773	.469	.514	1.300	1.260	.153	.198	1.469	1.380	.905	.908
21	G	1.3750	.790	.741	.500	.545	1.425	1.385	.183	.228	1.625	1.493	.905	.904
23	H	1.5000	.790	.741	.500	.545	1.550	1.510	.183	.228	1.750	1.626	.905	.904
25	J	1.6250	.790	.741	.500	.545	1.675	1.635	.183	.228	1.875	1.777	.905	.904

Millimeters

Shell Size	MS Shell Size Code	M +.00–.013 (TV)	M1 +.00 –.13 (CTV)	L Max. (TV)	L1 Max. (CTV)	S ±.25 (TV)	S1 ±.010 (CTV)	V Thread Metric	Z Max (TV)	Z1 Max (CTV)	GG ±.25 (TV)	GG1 ±.25 (CTV)	LL +.15 –.00 (TV)	LL1 ±.13 (CTV)
9	A	20.83	19.63	11.91	13.06	17.15	16.13	M12X1-6g	3.89	5.03	20.62	17.75	22.99	23.06
11	B	20.83	19.63	11.91	13.06	20.32	19.43	M15X1-6g	3.89	5.03	22.99	22.22	22.99	23.06
13	C	20.83	19.63	11.91	13.06	23.50	22.47	M18X1-6g	3.89	5.03	27.76	25.57	22.99	23.06
15	D	20.83	19.63	11.91	13.06	26.67	27.94	M22X1-6g	3.89	5.03	30.96	28.95	22.99	23.06
17	E	20.83	19.63	11.91	13.06	31.45	30.40	M25X1-6g	3.89	5.03	34.93	31.21	22.99	23.06
19	F	20.83	19.63	11.91	13.06	33.02	32.00	M28X1-6g	3.89	5.03	37.31	35.05	22.99	23.06
21	G	20.07	18.82	12.70	13.84	36.20	35.18	M31X1-6g	4.65	5.79	41.28	37.92	22.99	22.96
23	H	20.07	18.82	12.70	13.84	39.37	38.35	M34X1-6g	4.65	5.79	44.45	41.30	22.99	22.96
25	J	20.07	18.82	12.70	13.84	42.55	41.53	M37X1-6g	4.65	5.79	47.63	45.13	22.99	22.96

All dimensions for reference only

Jam Nut Receptacle

Military (D38999/24), Commercial (TV07, TVS07, CTV07, CTVP07)

PART NUMBER BUILDER Page 42-46
ONLINE CONFIGURATOR www.amphenol-aerospace.com

MILITARY
D38999/24

Commercial

ALUMINUM	COMPOSITE	STAINLESS STEEL
TVS07RF	CTVPS07RF	TVS07RK
TV07RW	CTV07RW	TVS07RKN
TV07DT	CTV07RGF	TVS07RS
TV07DZ	CTV07RGW	TVS07RL
TV07RGF		
TV07RGW		
TVS07RB		

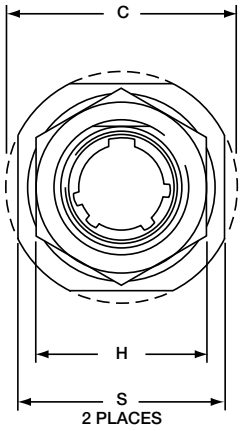

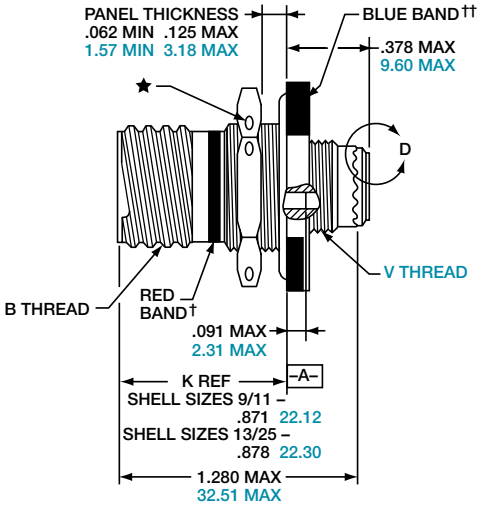

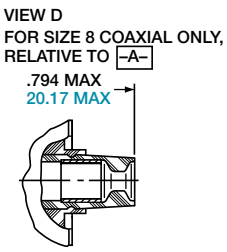

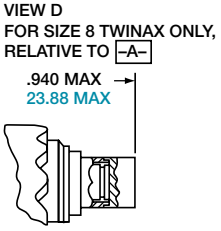

PANEL HOLE DIMENSIONS

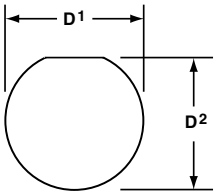

JAM NUT D-HOLE MOUNTING

† Red band indicates fully mated
†† Blue band indicates rear release contact retention system
★ .059 dia min.
1.5 dia min., 3 lockwire holes Formed lockwire hole design (6 holes) is optional

Inches

Shell Size	MS Shell Size Code	B Thread Class 2A 0.1P-0.3L-TS (Plated)	C Max.	D1 +.010 –.000	D2 +.000 –.010	H Hex +.017 –.016	S ±.010
9	A	.6250	1.199	.693	.657	.875	1.062
11	B	.7500	1.386	.825	.770	1.000	1.250
13	C	.8750	1.511	1.010	.955	1.188	1.375
15	D	1.0000	1.636	1.135	1.085	1.312	1.500
17	E	1.1875	1.761	1.260	1.210	1.438	1.625
19	F	1.2500	1.949	1.385	1.335	1.562	1.812
21	G	1.3750	2.073	1.510	1.460	1.688	1.938
23	H	1.5000	2.199	1.635	1.585	1.812	2.062
25	J	1.6250	2.323	1.760	1.710	2.000	2.188

Millimeters

Shell Size	MS Shell Size Code	C Max.	D1 +.25 –.00	D2 +.00 –.25	H Hex +.43 –.41	S ±.25	V Thread Metric
9	A	30.45	17.60	16.70	22.23	26.97	M12X1-6g
11	B	35.20	20.96	19.59	25.40	31.75	M15X1-6g
13	C	38.38	25.65	24.26	30.18	34.93	M18X1-6g
15	D	41.55	28.83	27.56	33.32	38.10	M22X1-6g
17	E	44.73	32.01	30.73	36.53	41.28	M25X1-6g
19	F	49.50	35.18	33.91	39.67	46.02	M28X1-6g
21	G	52.65	38.35	37.08	42.80	49.23	M31X1-6g
23	H	55.85	41.53	40.26	46.02	52.37	M34X1-6g
25	J	59.00	44.70	43.43	50.80	55.58	M37X1-6g

All dimensions for reference only NOTE: Deep reach receptacles are available for panel thicknesses up to .750 max.

Straight Plug

Military (D38999/26), Commercial (TV06, TVS06, CTV06, CTVS06)

PART NUMBER BUILDER Page 42-46
ONLINE CONFIGURATOR www.amphenol-aerospace.com

MILITARY
D38999/26

Commercial

ALUMINUM	COMPOSITE	STAINLESS STEEL
TVS06RF	CTVS06RF	TVS06RK
TV06RW	CTV06RW	TVS06RKN
TV06DT	CTV06RGF	TVS06RS
TV06DZ	CTV06RGW	TVS06RL
TV06RGF		
TV06RGW		
TVS06RB		

METAL

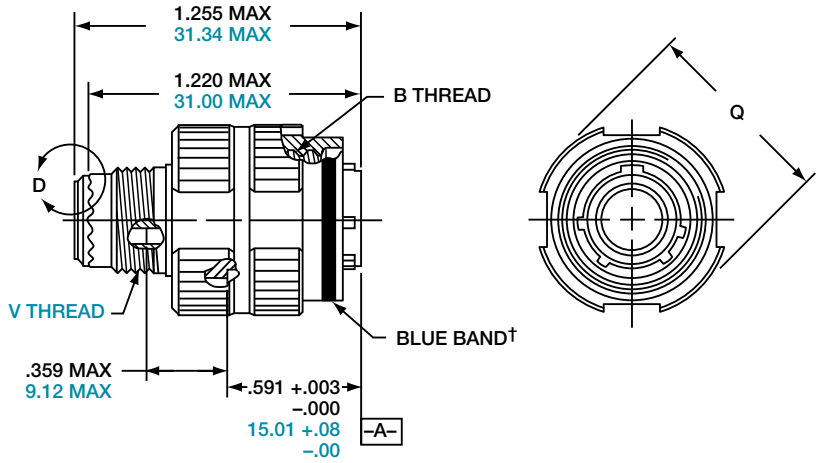

VIEW D
FOR SIZE 8 COAXIAL ONLY, RELATIVE TO –A–

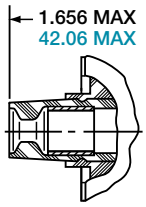

COMPOSITE

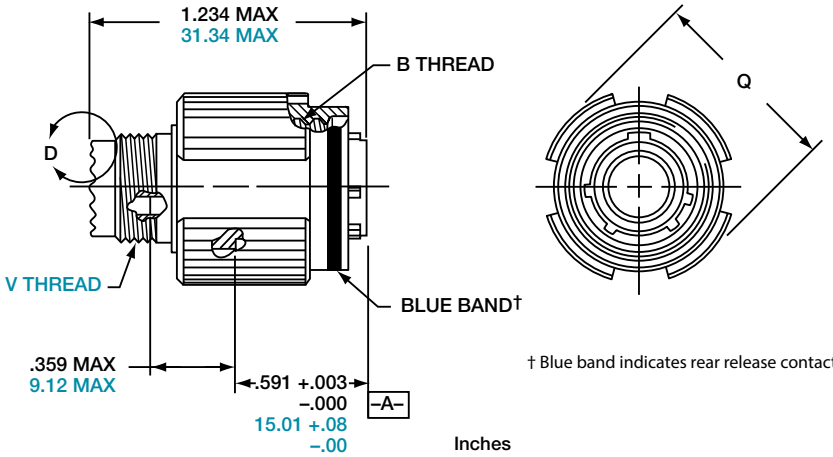

VIEW D
FOR SIZE 8 TWINAX ONLY, RELATIVE TO –A–

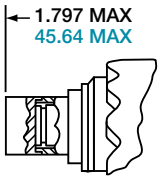

† Blue band indicates rear release contact retention system

Inches

Shell Size	MS Shell Size Code	B Thread 0.1P-0.3L-TS-2B (Plated)	Q Dia. Max.
9	A	.6250	.858
11	B	.7500	.984
13	C	.8750	1.157
15	D	1.0000	1.280
17	E	1.1875	1.406
19	F	1.2500	1.516
21	G	1.3750	1.642
23	H	1.5000	1.768
25	J	1.6250	1.890

All dimensions for reference only.

Millimeters

Shell Size	MS Shell Size Code	Q Max.	V Thread Metric
9	A	21.8	M12X1-6g
11	B	25.0	M15X1-6g
13	C	29.4	M18X1-6g
15	D	32.5	M22X1-6g
17	E	35.7	M25X1-6g
19	F	38.5	M28X1-6g
21	G	41.7	M31X1-6g
23	H	44.9	M34X1-6g
25	J	48.0	M37X1-6g

Flange Mounting Plug

Commercial (TV09, TVS09, CTV09, CTVPS09)

Amphenol Aerospace

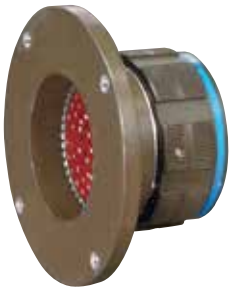

PART NUMBER BUILDER Page 44-46
ONLINE CONFIGURATOR www.amphenol-aerospace.com

Commercial

ALUMINUM	COMPOSITE	STAINLESS STEEL
TVS09RF	CTVPS09RF	TVS09RK
TV09RW	CTV09RW	TVS09RKN
TV09DT	CTV09RGF	TVS09RS
TV09DZ	CTV09RGW	TVS09RL
TV09RGF		
TV09RGW		
TVS09RB		

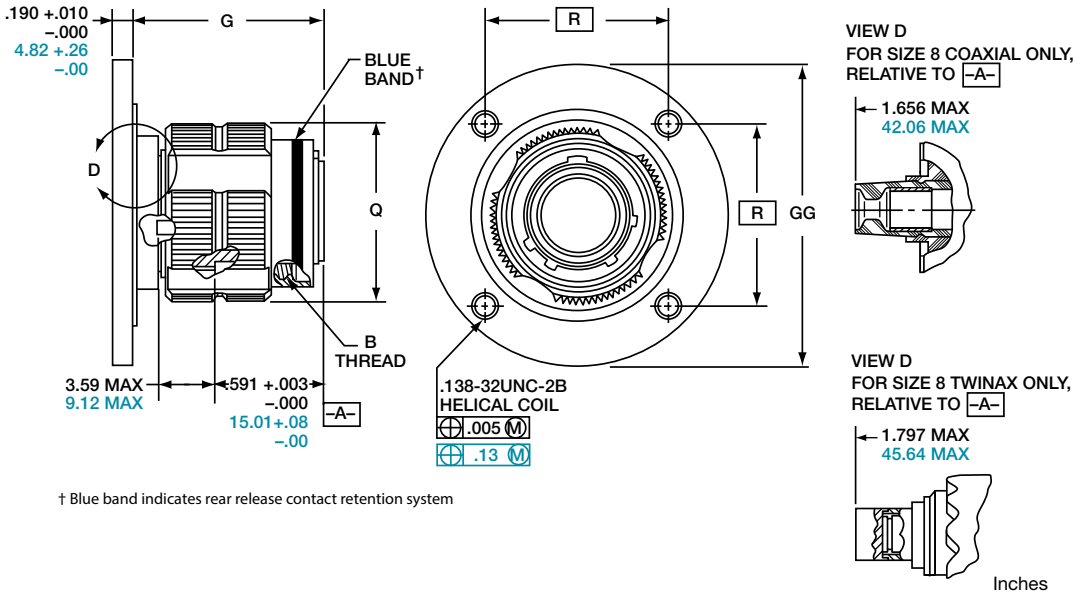

† Blue band indicates rear release contact retention system

Inches

Shell Size	MS Shell Size Coded	B Thread 0.1P-0.3L-TS-2A (Plated)	G ±.060	Q Dia. Max	R	GG Dia ±.005
9**	A	.6250	1.106	.859	1.038	1.838
11	B	.7500	1.106	.969	1.115	1.948
13**	C	.8750	1.106	1.141	1.240	2.124
15	D	1.0000	1.106	1.266	1.327	2.248
17	E	1.1875	1.106	1.391	1.417	2.375
19	F	1.2500	1.356	1.500	1.557	2.495
21	G	1.3750	1.356	1.625	1.624	2.568
23	H	1.5000	1.356	1.750	1.713	2.723
25	J	1.6250	1.356	1.875	1.801	2.848

Millimeters

Shell Size	MS Shell Size Coded	G ±.1.52	Q Dia. Max	R	GG Dia ±.13
9**	A	28.09	21.82	26.37	46.69
11	B	28.09	24.62	28.32	49.48
13**	C	28.09	28.98	31.50	53.95
15	D	28.09	32.16	33.71	57.10
17	E	28.09	35.33	35.99	60.33
19	F	34.44	38.10	39.55	63.37
21	G	34.44	41.28	41.25	65.23
23	H	34.44	44.45	43.51	69.16
25	J	34.44	47.63	45.75	72.34

All dimensions for reference only
** Partially tooled. Consult Amphenol Aerospace for availability
☐ Designates true position dimensioning

High Vibration Dualok Connector 38999 Series III Type

Commercial Plug (TV56, TVS56, CTV56, CTVS56)

PART NUMBER BUILDER Page 44-46
ONLINE CONFIGURATOR www.amphenol-aerospace.com

Commercial

ALUMINUM	COMPOSITE	STAINLESS STEEL
TVS56RF	CTVS56RF	TVS56RK
TV56RW	CTV56RW	TVS56RKN
TV56DT	CTV56RGF	TVS56RS
TV56DZ	CTV56RGW	TVS56RL
TV56RGF		
TV56RGW		
TVS56RB		

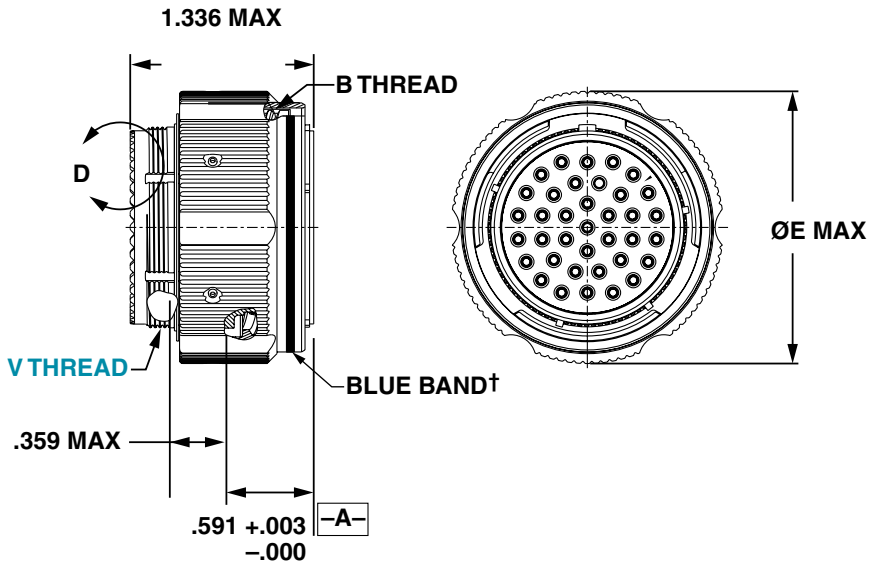

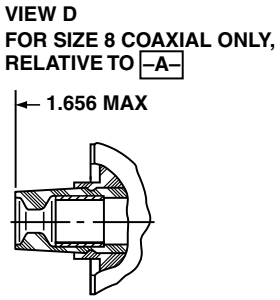

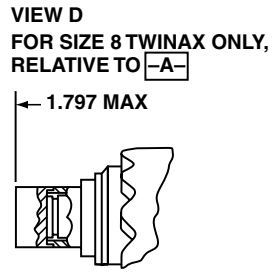

Shell Size	B Thread 0.1-0.3L-TS-2B (Plated)	E Dia. Max.	Q Dia. Max. Metric	V Thread Metric.
9	.6250	.953	24.2	M12X1-6g
11	.7500	1.053	26.7	M15X1-6g
13	.8750	1.252	31.8	M18X1-6g
15	1.0000	1.365	34.6	M22X1-6g
19	1.2500	1.605	40.7	M28X1-6g
21	1.3750	1.735	44.0	M31X1-6g
25	1.6250	1.975	50.1	M37X1-6g

Clutch-Lok™ Plug

Commercial (26)

Amphenol Aerospace

Designed for high vibration and harsh environments such as aircraft gas turbine engines, the CLUTCH-LOK is also an ideal choice for demanding applications such as aircraft, space and military ground vehicles. The unique clutch design of the Amphenol CLUTCH-LOK means that you don't have to compromise the need for quick, smooth mating of plugs and receptacles in order to get increased uncoupling torque.

The CLUTCH-LOK has proven to not only remain mated and pass all the Series III specification requirements, it also has proven to actually tighten itself under vibration. This is a powerful advantage over the traditionally high vibration application connectors. The CLUTCH-LOK is also a tremendous advantage in inaccessible, hard to reach areas where mating torque is difficult to apply and complete coupling is not verifiable by inspection.

CLUTCH-LOK FEATURES AND BENEFITS:

- High degree of differential torque
- Infinite free coupling and positive metal-to-metal bottoming with each mating
- No settling back to the next ratchet tooth
- Available with stainless steel shells and Class K firewall inserts
- All the advantages of MIL-DTL-38999 Series III including EMI/RFI shielding, electrolytic erosion resistance and contact protection with recessed pins
- Enhanced connector performance at affordable prices
- Completely intermateable with all existing MIL-DTL-38999 Series III connectors
- Fully QPL'd

PART NUMBER BUILDER Page 44-46
ONLINE CONFIGURATOR www.amphenol-aerospace.com

STAINLESS STEEL

MTV26RK

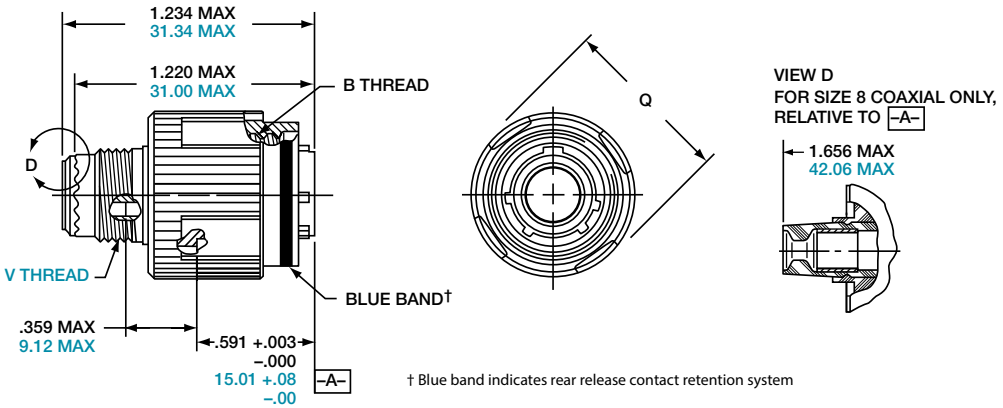

† Blue band indicates rear release contact retention system

Inches

Shell Size	MS Shell Size Code	B Thread 0.1P-0.3L-TS-2B (Plated)	Q Dia. Max.
9	A	.6250	.858
11	B	.7500	.984
13	C	.8750	1.157
15	D	1.0000	1.280
17	E	1.1875	1.406
19	F	1.2500	1.516
21	G	1.3750	1.642
23	H	1.5000	1.768
25	J	1.6250	1.890

All dimensions for reference only.

Millimeters

Shell Size	MS Shell Size Code	Q Max.	V Thread Metric
9	A	21.8	M12X1-6g
11	B	25.0	M15X1-6g
13	C	29.4	M18X1-6g
15	D	32.5	M22X1-6g
17	E	35.7	M25X1-6g
19	F	38.5	M28X1-6g
21	G	41.7	M31X1-6g
23	H	44.9	M34X1-6g
25	J	48.0	M37X1-6g

PCB Wall Mounting Receptacle (Back Panel Mounting)

Commercial (TVP00 & TVPS00)

PART NUMBER BUILDER Page 44-46
ONLINE CONFIGURATOR www.amphenol-aerospace.com

Commercial

ALUMINUM	STAINLESS STEEL
TVPS00RF	TVPS00RK
TVP00RW	TVPS00RKN
TVP00DT	TVPS00RS
TVP00DZ	TVPS00RL
TVPS00RB	

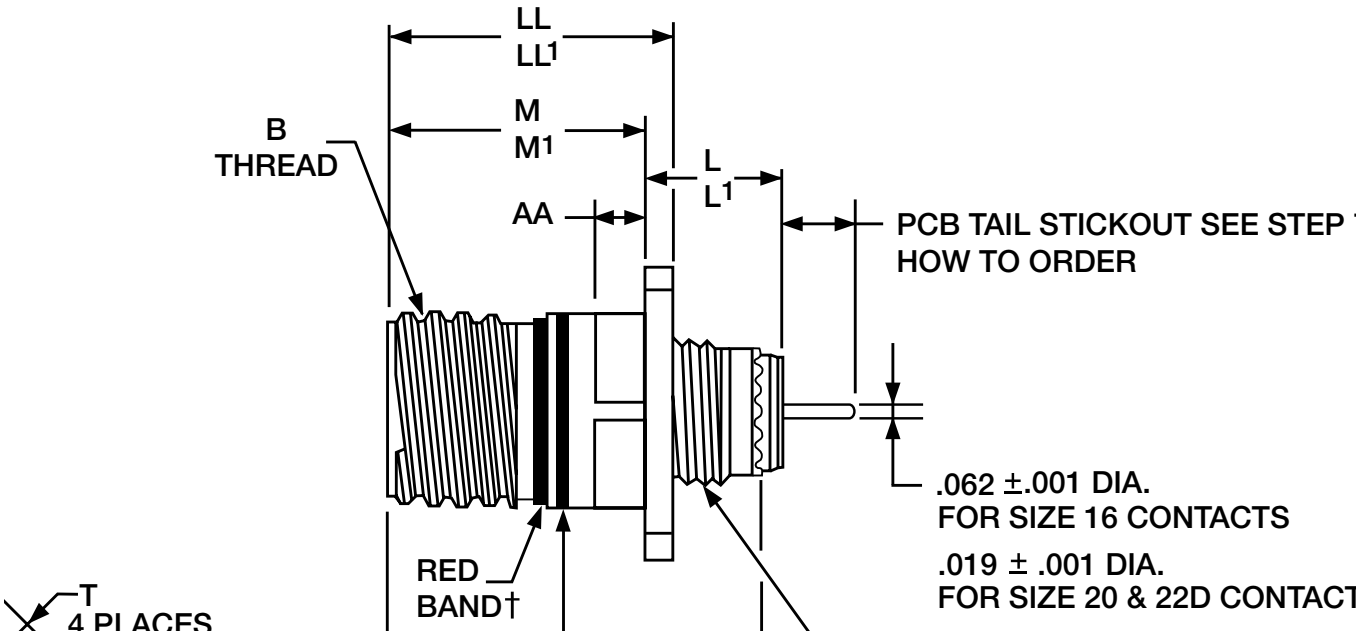

Shell Size	B Thread Class 2A (Plated) 0.1P-0.3L-TS	L Max. (TV)	L¹ Max. (CTV)	M +.000 −.005 (TV)	M¹ +.000 −.005 (CTV)	R1	R2	S Max.	T +.008 −.006	V Thread Metric	AA Max. Panel Thickness	LL +.006 −.000 (TV)	LL¹ ±.005 (CTV)	TT +.008 −.006
9	.6250	.469	.514	.820	.773	.719	.594	.948	.128	M12X1-6g	.234	.905	.908	.216
11	.7500	.469	.514	.820	.773	.812	.719	1.043	.128	M15X1-6g	.234	.905	.908	.194
13	.8750	.469	.514	.820	.773	.906	.812	1.137	.128	M18X1-6g	.234	.905	.908	.194
15	1.0000	.469	.514	.820	.773	.969	.906	1.232	.128	M22X1-6g	.234	.905	.908	.173
17	1.1875	.469	.514	.820	.773	1.062	.969	1.323	.128	M25X1-6g	.234	.905	.908	.194
19	1.2500	.469	.514	.820	.773	1.156	1.062	1.449	.128	M28X1-6g	.234	.905	.908	.194
21	1.3750	.500	.545	.790	.741	1.250	1.156	1.575	.128	M31X1-6g	.204	.905	.904	.194
23	1.5000	.500	.545	.790	.741	1.375	1.250	1.701	.154	M34X1-6g	.204	.905	.904	.242
25	1.6250	.500	.545	.790	.741	1.500	1.375	1.823	.154	M37X1-6g	.204	.905	.904	.242

All dimensions for reference only.
Most common options are shown; other options are available.

☐ Designates true position dimensioning

PCB Wall Mounting Receptacle (Back Panel Mounting) (With Clinch Nuts)

Commercial (TVP10 & TVPS10)

PART NUMBER BUILDER Page 44-46
ONLINE CONFIGURATOR www.amphenol-aerospace.com

Commercial

ALUMINUM	STAINLESS STEEL
TVPS10RF	TVPS10RK
TVP10RW	TVPS10RKN
TVP10DT	TVPS10RS
TVP10DZ	TVPS10RL
TVPS10RB	

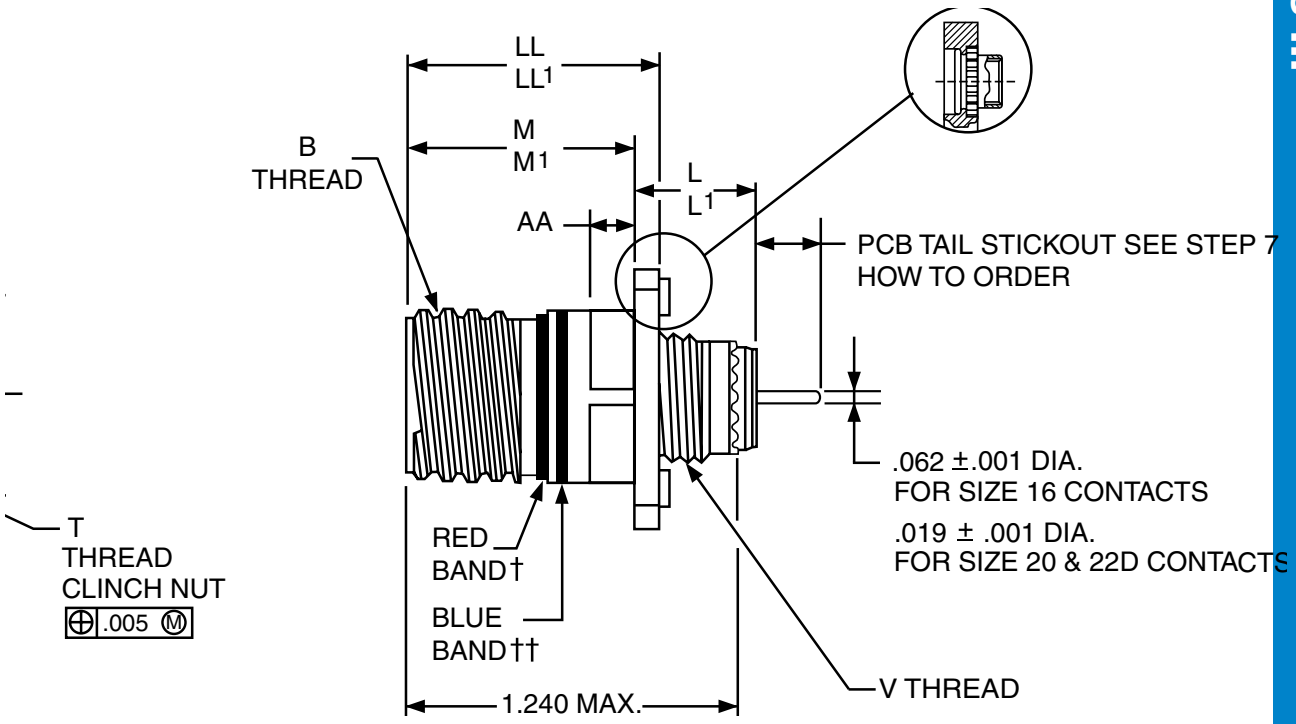

Shell Size	B Thread Class 2A (Plated) 0.1P-0.3L-TS	L Max. (TV)	L[1] Max. (CTV)	M +.000 –.005 (TV)	M[1] +.000 –.005 (CTV)	R	S Max.	T Thread	V Thread Metric	AA Max. Panel Thickness	LL +.006 –.000 (TV)	LL[1] ±.005 (CTV)
9	.6250	.469	.514	.820	.773	.719	1.094	.112-40UNC-3B	M12X1-6g	.234	.905	.908
11	.7500	.469	.514	.820	.773	.812	1.187	.112-40UNC-3B	M15X1-6g	.234	.905	.908
13	.8750	.469	.514	.820	.773	.906	1.281	.112-40UNC-3B	M18X1-6g	.234	.905	.908
15	1.0000	.469	.514	.820	.773	.969	1.344	.112-40UNC-3B	M22X1-6g	.234	.905	.908
17	1.1875	.469	.514	.820	.773	1.062	1.437	.112-40UNC-3B	M25X1-6g	.234	.905	.908
19	1.2500	.469	.514	.820	.773	1.156	1.531	.112-40UNC-3B	M28X1-6g	.234	.905	.908
21	1.3750	.500	.545	.790	.741	1.250	1.625	.112-40UNC-3B	M31X1-6g	.204	.905	.904
23	1.5000	.500	.545	.790	.741	1.375	1.750	.138-32UNC-3B	M34X1-6g	.204	.905	.904
25	1.6250	.500	.545	.790	.741	1.500	1.875	.138-32UNC-3B	M37X1-6g	.204	.905	.904

All dimensions for reference only.
Consult Amphenol for more information on ordering connectors with clinch nuts.
Most common options are shown; other options are available.

☐ Designates true position dimensioning
† Red band indicates fully mated
†† Blue band indicates rear release contact retention system

PCB Wall Mounting Double Flange Receptacle

Commercial (TVP40 & TVPS40)

PART NUMBER BUILDER Page 44-46
ONLINE CONFIGURATOR www.amphenol-aerospace.com

Commercial

ALUMINUM	STAINLESS STEEL
TVPS40RF	TVPS40RK
TVP40RW	TVPS40RKN
TVP40DT	TVPS40RS
TVP40DZ	TVPS40RL
TVPS40RB	

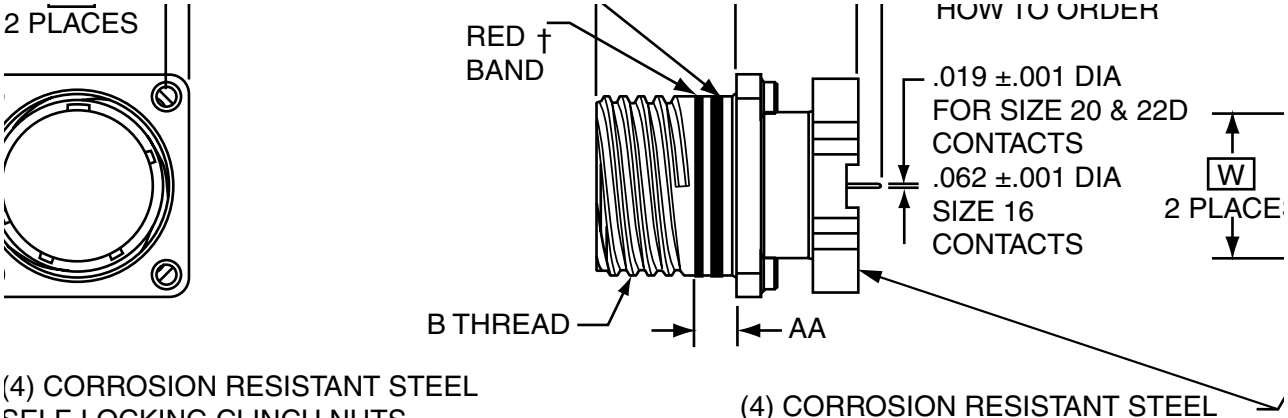

(4) CORROSION RESISTANT STEEL
SELF-LOCKING CLINCH NUTS
.112-40 UNC-3B PER MIL-N-45938/6-4C
EXCEPT FOR TV40 SHELL SIZES 23 & 25:
.138-32 UNC-3B PER MIL-N-45938/6-6C

⊕ | ∅ .005 Ⓜ

(4) CORROSION RESISTANT STEEL
.112-40 UNC-3B HELICAL INSERTS

⊕ | ∅ .005 Ⓜ

Shell Size	MS Shell Size Code (For Ref.)	A Dia. ±.005 (TV)	A Dia. ±.005 (CTV)	B Thread Class 2A (Plated) 0.1P-0.3L-TS	M +.000 –.005	M[1] ±.003 (CTV)	R (Panel Mount) (CTV)	R (Panel Mount (TV)	S Max. (TV)	S Max. (CTV)	AA Max. Panel Thickness	PCB Mounting Dimensions	
												T Dia. (TV) TP	W (CTV) TP
9	A	NA	1.016	.6250	.820	.770	.719	N/A	NA	.949	.234	NA	.532
11	B	1.062	1.148	.7500	.820	.770	.812	.766	1.187	1.042	.234	. .850	.601
13	C	1.250	1.250	.8750	.820	.770	.906	.859	1.281	1.136	.234	.994	.703
15	D	1.375	1.375	1.0000	.820	.770	.969	.938	1.344	1.230	.234	1.119	.791
17	E	1.500	1.500	1.1875	.820	.770	1.062	1.016	1.437	1.323	.234	1.237	.875
19	F	1.625	1.625	1.2500	.820	.770	1.156	1.110	1.531	1.449	.234	1.379	.975
21	G	1.750	1.750	1.3750	.820	.738	1.250	1.206	1.625	1.573	.204	1.489	1.053
23	H	1.875	1.875	1.5000	.820	.738	1.375	1.312	1.750	1.699	.204	1.619	1.195
25	J	2.000	2.000	1.6250	.820	.738	1.500	1.438	1.875	1.823	.204	1.744	1.233

All dimensions for reference only.

† Red band indicates fully mated
†† Blue band indicates rear release contact retention system

PCB Box Mounting Receptacle

Commercial (TVP02 & TVPS02)

PART NUMBER BUILDER Page 44-46
ONLINE CONFIGURATOR www.amphenol-aerospace.com

Commercial

ALUMINUM	STAINLESS STEEL
TVPS02RF	TVPS02RK
TVP02RW	TVPS02RKN
TVP02DT	TVPS02RS
TVP02DZ	TVPS02RL
TVPS02RB	

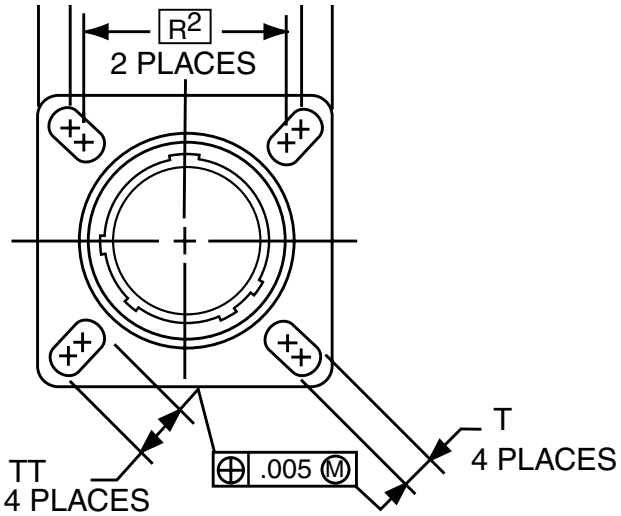

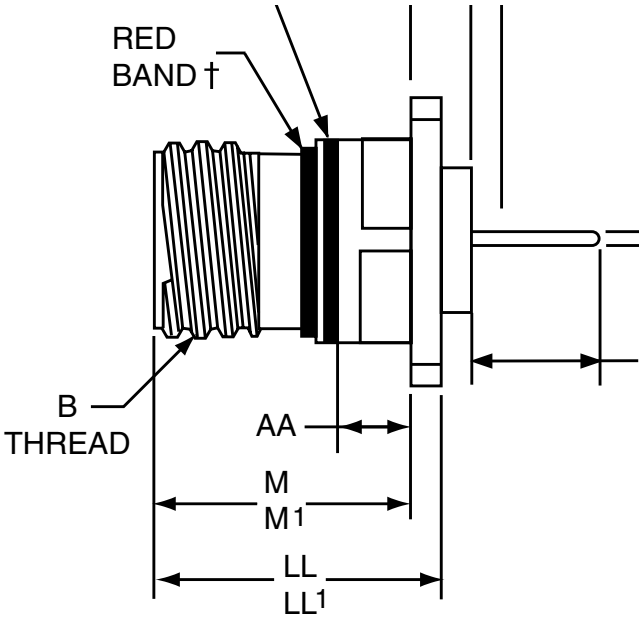

Shell Size	B Thread Class 2A (Plated) 0.1P-0.3L-TS	L Max. (TV)	L[1] Max. (CTV)	M +.000 −.005 (TV)	M[1] +.000 −.005 (CTV)	R1	R2	S Max.	T +.008 −.006	AA Max. Panel Thickness	LL +.006 −.000 (TV)	LL[1] ±.005 (CTV)	TT ±.008
9	.6250	.205	.250	.820	.773	.719	.594	.948	.128	.234	.905	.908	.216
11	.7500	.205	.250	.820	.773	.812	.719	1.043	.128	.234	.905	.908	.194
13	.8750	.205	.250	.820	.773	.906	.812	1.137	.128	.234	.905	.908	.194
15	1.0000	.205	.250	.820	.773	.969	.906	1.232	.128	.234	.905	.908	.173
17	1.1875	.205	.250	.820	.773	1.062	.969	1.323	.128	.234	.905	.908	.194
19	1.2500	.205	.250	.820	.773	1.156	1.062	1.449	.128	.234	.905	.908	.194
21	1.3750	.235	.280	.790	.741	1.250	1.156	1.575	.128	.204	.905	.904	.194
23	1.5000	.235	.280	.790	.741	1.375	1.250	1.701	.154	.204	.905	.904	.242
25	1.6250	.235	.280	.790	.741	1.500	1.375	1.823	.154	.204	.905	.904	.242

All dimensions for reference only.
Most common options are shown; other options are available.

☐ Designates true position dimensioning
† Red band indicates fully mated
†† Blue band indicates rear release contact retention system

PCB Box Mounting Receptacle (With Clinch Nuts)

Commercial (TVP12 & TVPS12)

PART NUMBER BUILDER Page 44-46
ONLINE CONFIGURATOR www.amphenol-aerospace.com

Commercial

ALUMINUM	STAINLESS STEEL
TVPS12RF	TVPS12RK
TVP12RW	TVPS12RKN
TVP12DT	TVPS12RS
TVP12DZ	TVPS12RL
TVPS12RB	

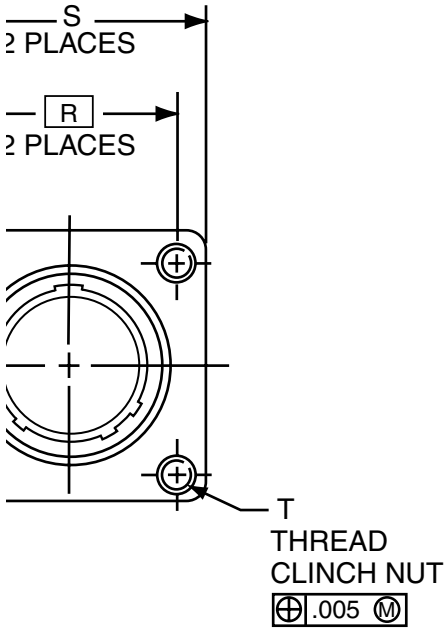

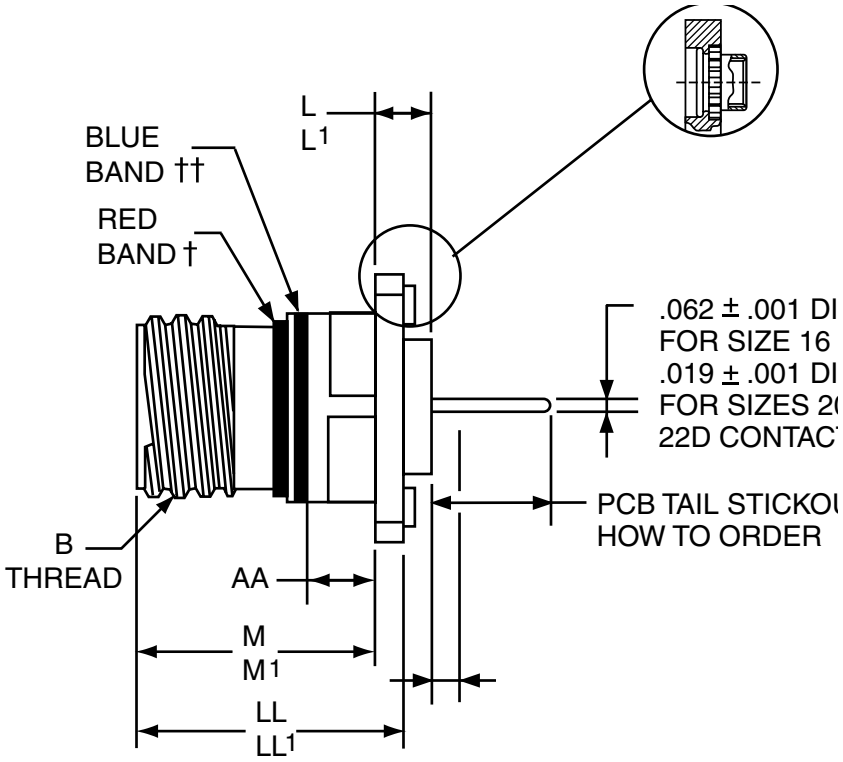

Shell Size	B Thread Class 2A (Plated) 0.1P-0.3L-TS	L Max. (TV)	L¹ Max. (CTV)	M +.000 −.005 (TV)	M¹ +.000 −.005 (CTV)	R	S Max.	T Thread	AA Max. Panel Thickness	LL +.006 −.000 (TV)	LL¹ +.006 −.000 (CTV)
9	.6250	.205	.250	.820	.773	.719	1.031	.112-40UNC-3B	.234	.905	.908
11	.7500	.205	.250	.820	.773	.812	1.125	.112-40UNC-3B	.234	.905	.908
13	.8750	.205	.250	.820	.773	.906	1.172	.112-40UNC-3B	.234	.905	.908
15	1.0000	.205	.250	.820	.773	.969	1.281	.112-40UNC-3B	.234	.905	.908
17	1.1875	.205	.250	.820	.773	1.062	1.375	.112-40UNC-3B	.234	.905	.908
19	1.2500	.205	.250	.820	.773	1.156	1.469	.112-40UNC-3B	.234	.905	.908
21	1.3750	.235	.280	.790	.741	1.250	1.562	.112-40UNC-3B	.204	.905	.904
23	1.5000	.235	.280	.790	.741	1.375	1.750	.112-40UNC-3B	.204	.905	.904
25	1.6250	.235	.280	.790	.741	1.500	1.875	.112-40UNC-3B	.204	.905	.904

All dimensions for reference only.
Most common options are shown; other options are available.

☐ Designates true position dimensioning
† Red band indicates fully mated
†† Blue band indicates rear release contact retention system

PCB Jam Nut Receptacle

Commercial (TV07 & TVS07)

PART NUMBER BUILDER Page 44-46
ONLINE CONFIGURATOR www.amphenol-aerospace.com

Commercial

ALUMINUM	STAINLESS STEEL
TVS07RF	TVS07RK
TV07RW	TVS07RKN
TV07DT	TVS07RS
TV07DZ	TVS07RL
TVS07RB	

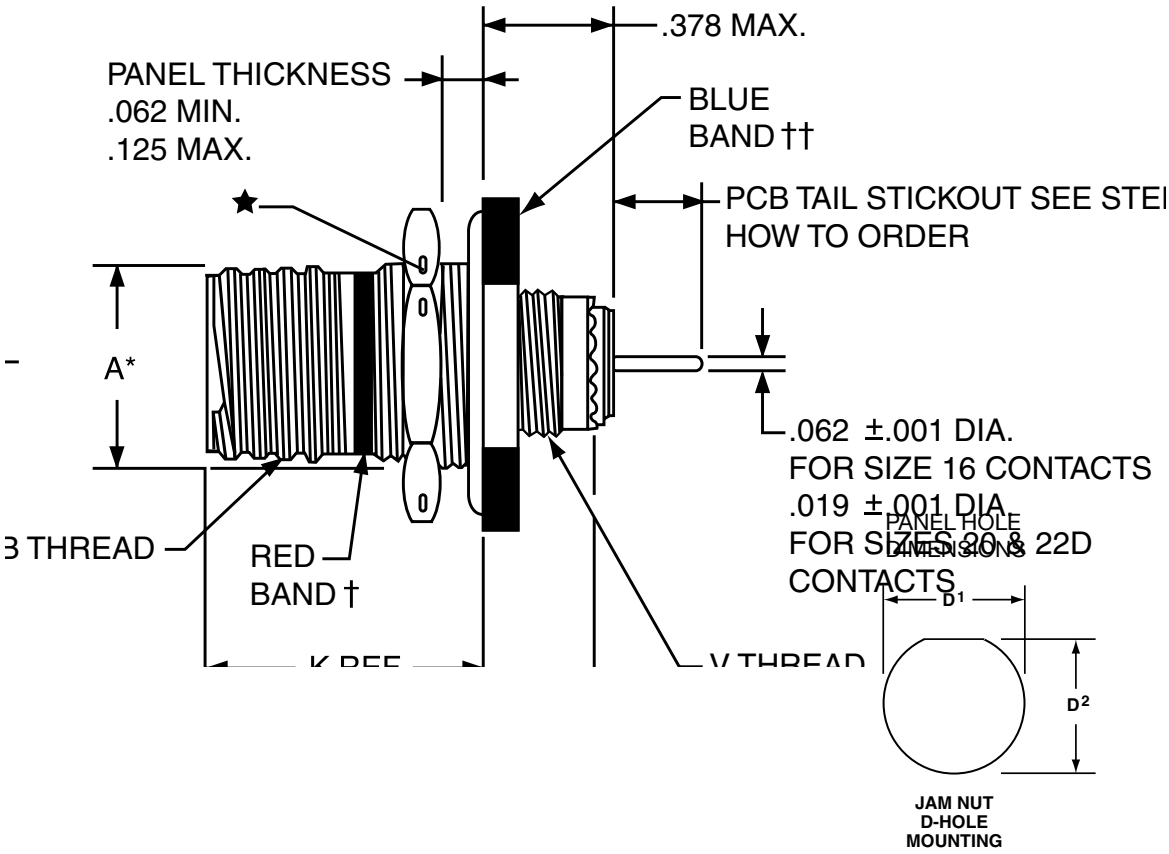

Shell Size	A* +.000 −.010	B Thread Class 2A (Plated) 0.1P-0.3L-TS	C Max.	D¹ +.010 −.000	D² +.010 −.000	H Hex +.017 −.016	S ±.010	T +.010 −.000	V Thread Metric
9	.669	.6250	1.199	.700	.670	.875	1.062	.697	M12X1-6g
11	.769	.7500	1.386	.825	.770	1.000	1.250	.822	M15X1-6g
13	.955	.8750	1.511	1.010	.955	1.188	1.375	1.007	M18X1-6g
15	1.084	1.0000	1.636	1.135	1.085	1.312	1.500	1.134	M22X1-6g
17	1.208	1.1875	1.761	1.260	1.210	1.438	1.625	1.259	M25X1-6g
19	1.333	1.2500	1.949	1.385	1.335	1.562	1.812	1.384	M28X1-6g
21	1.459	1.3750	2.073	1.510	1.460	1.688	1.938	1.507	M31X1-6g
23	1.575	1.5000	2.199	1.635	1.585	1.812	2.062	1.634	M34X1-6g
25	1.709	1.6250	2.323	1.760	1.710	2.000	2.188	1.759	M37X1-6g

All dimensions for reference only.
Most common options are shown;
other options are available.

† Red band indicates fully mated
†† Blue band indicates rear release contact retention system
★ .059 dia. min. 3 lockwire holes. Formed lockwire hole design (6 holes) is optional.*"D" shaped mounting hole dimensions

PCB Jam Nut, Double Flange Receptacles

Commercial (TVP47 & TVPS47)

PART NUMBER BUILDER Page 44-46
ONLINE CONFIGURATOR www.amphenol-aerospace.com

Commercial

ALUMINUM	STAINLESS STEEL
TVPS47RF	TVPS47RK
TVP47RW	TVPS47RKN
TVP47DT	TVPS47RS
TVP47DZ	TVPS47RL

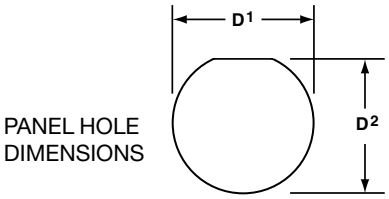

JAM NUT
D-HOLE
MOUNTING

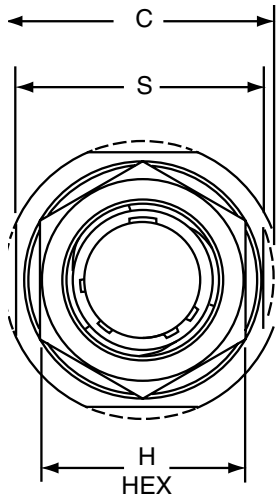

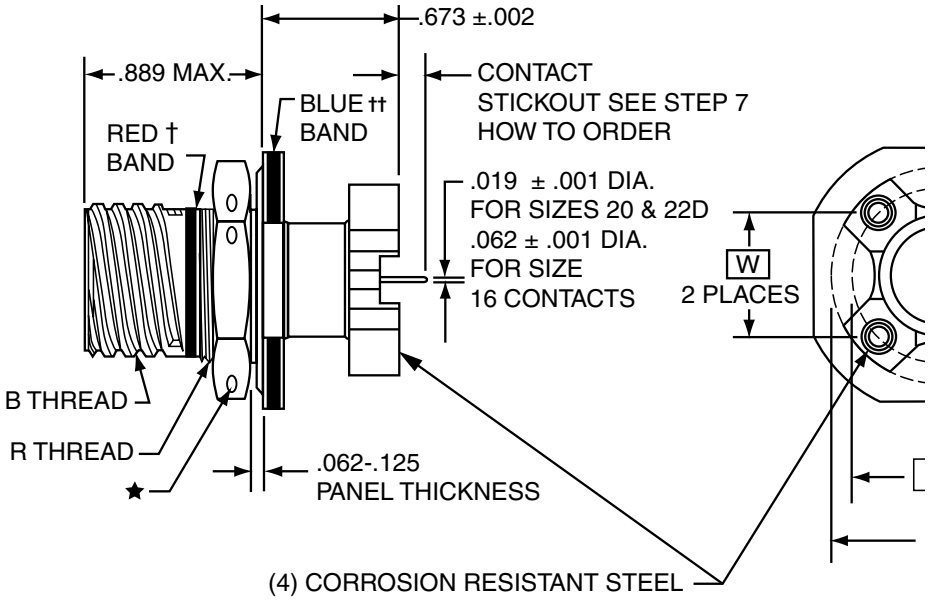

Shell Size	MS Shell Size Code (For Ref.)	B Thread Class 2A 0.1P-0.3L-TS (Plated)	C ±.005 (Jam Nut Flange Dia.	D¹ +.010 –.000	D² +.000 –.010	H Hex +.017 –.016	M Dia. ±.005 (TV)	M Dia. ±.005 (CTV)	R Thread Metric (Plated)	S +.011 –.010	PCB Mounting Dimensions V Dia. (TV) TP	PCB Mounting Dimensions W (CTV) TP
9	A	.6250	1.188	.700	.670	.875	1.062	1.016	M17X1-6g0.100R	1.062	.753	.532
11	B	.7500	1.375	.825	.770	1.000	1.062	1.148	M20X1-6g0.100R	1.250	.850	.601
13	C	.8750	1.500	1.010	.955	1.188	1.250	1.250	M25X1-6g0.100R	1.375	.994	.703
15	D	1.0000	1.625	1.135	1.085	1.312	1.375	1.375	M28X1-6g0.100R	1.500	1.119	.791
17	E	1.1875	1.750	1.260	1.210	1.438	1.500	1.500	M32X1-6g0.100R	1.625	1.237	.875
19	F	1.2500	1.937	1.385	1.335	1.562	1.625	1.625	M35X1-6g0.100R	1.812	1.379	.975
21	G	1.3750	2.062	1.510	1.460	1.688	1.750	1.750	M38X1-6g0.100R	1.937	1.489	1.053
23	H	1.5000	2.188	1.635	1.585	1.812	1.875	1.875	M41X1-6g0.100R	2.062	1.644	1.145
25	J	1.6250	2.312	1.760	1.710	2.000	2.000	2.000	M44X1-6g0.100R	2.188	1.744	1.233

All dimensions for reference only.
† Red band indicates fully mated
†† Blue band indicates rear release contact retention system.

★ .059 dia. min. (1.5 dia. min.) 3 lockwire holes.
Formed lockwire hole design (6 holes) is optional.

PCB Hermetic Box Mounting Receptacle

Commercial

Amphenol Aerospace

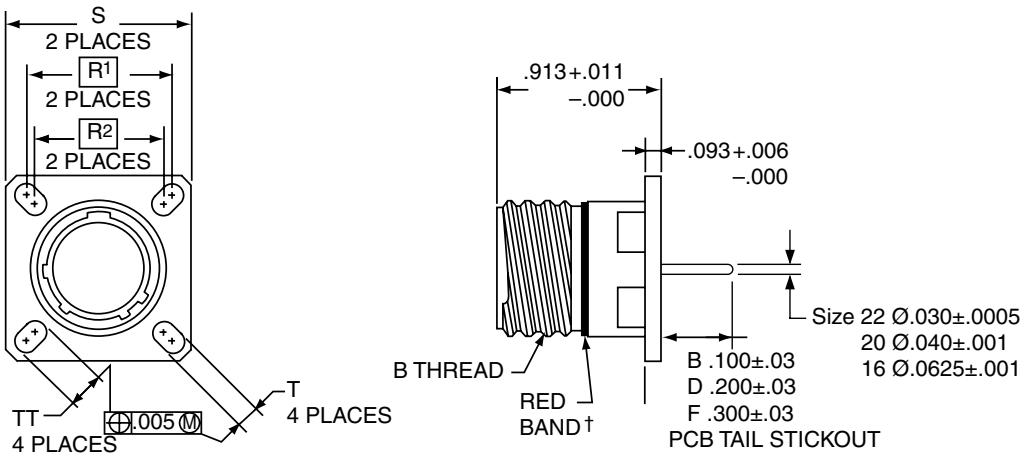

PART # See chart below	1. Base Number	2. Coded Shell Size	3. Insert Arrg.	4. Contact Type/Alt. Keying	5. Shell Finish	6. Tail Length
	10-626	501	-35	P	1	B

HOW TO ORDER

1. BASE NUMBER:

10-626	Base Number for MIL-DTL-38999 Series III Hermetic with PCB Tail

2. SELECT A CODED SHELL SIZE:

See chart below 501-509, designates size 9-25 shell size.
Example: 501 = Size 9 Shell

3. SELECT AN INSERT ARRANGEMENT:

Refer to insert availability chart on page 2-5 and pin-out illustrations on pages 14-28. Please enter the second number which represents the Insert Arrangement number.

-35	Designates Insert Arrangement Number

4. CONTACT TYPE/ALTERNATE KEYING POSITIONS:

Refer to page 46 for alternate rotation letters to use.

P	Designates Pin Contacts in Normal Position
S	Designates Socket Contacts in Normal Position

5. SELECT A SHELL FINISH:

1	Hermetic seal, passivated Stainless Steel, 200°C
2	Hermetic seal, Stainless Steel w/Nickel Plate
3	Carbon Steel w/reflowed tin plate

6. SELECT A TAIL LENGTH:

B	.100±.03
D	.200±.03
F	.300±.03

Shell Size	Part Number	B Thread 0.1P-0.3L-TS (Plated)	R1	R2	S ±.010	T ±.008	TT ±.008
9	10-626501-XXX	.6250	.719	.594	.938	.128	.216
11	502-XXX	.7500	.812	.719	1.031	.128	.194
13	503-XXX	.8750	.906	.812	1.125	.128	.194
15	504-XXX	1.0000	.969	.906	1.219	.128	.173
17	505-XXX	1.1875	1.062	.969	1.312	.128	.194
19	506-XXX	1.2500	1.156	1.062	1.438	.128	.194
21	507-XXX	1.3750	1.250	1.156	1.562	.128	.194
23	508-XXX	1.5000	1.375	1.250	1.688	.154	.242
25	509-XXX	1.6250	1.500	1.375	1.812	.154	.242

All dimensions for reference.

☐ Designates true position dimensioning

† Red band indicates fully mated

NOTE: Consult Amphenol Aerospace for availability of non-glass-sealed versions with printed circuit tail contacts.

A

PCB Hermetic Jam Nut Receptacle

Commercial

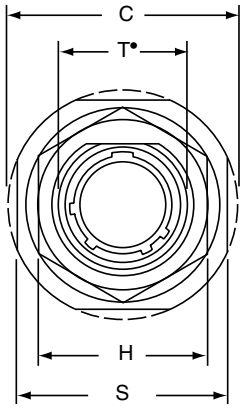

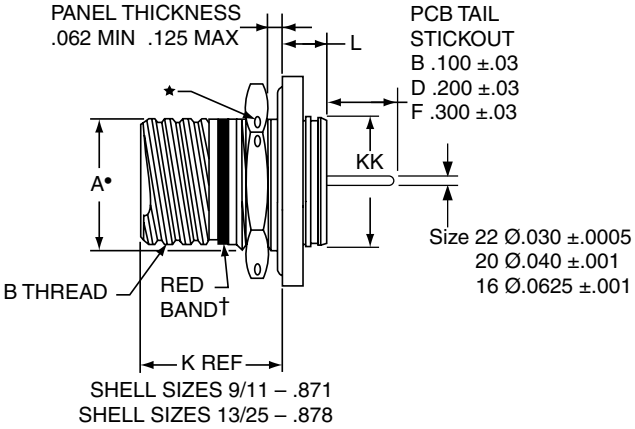

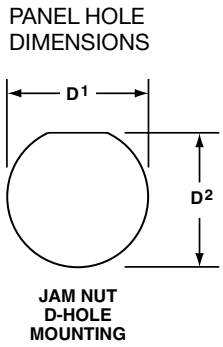

	1.	2.	3.	4.	5.	6.
PART # See chart below	Base Number	Coded Shell Size	Insert Arrg.	Contact Type/Alt. Keying	Shell Finish	Tail Length
	10-626	471	-35	P	1	B

HOW TO ORDER

1. BASE NUMBER:

10-626	Base Number for MIL-DTL-38999 Series III Hermetic with PCB Tail

2. SELECT A CODED SHELL SIZE:

See chart below 471-479, designates size 9-25 shell size.

3. SELECT AN INSERT ARRANGEMENT:

Refer to insert availability chart on page 2-5 and pin-out illustrations on pages 14-28. Please enter the second number which represents the Insert Arrangement number.

-35	Designates Insert Arrangement Number

4. CONTACT TYPE/ALTERNATE KEYING POSITIONS:

Refer to page 46 for alternate rotation letters to use.

P	Designates Pin Contacts in Normal Position
S	Designates Socket Contacts in Normal Position

5. SELECT A SHELL FINISH:

1	Hermetic seal, passivated Stainless Steel, 200°C
2	Hermetic seal, Stainless Steel w/Nickel Plate
3	Carbon Steel w/reflowed tin plate

6. SELECT A TAIL LENGTH:

B	100 ±.03
D	.200 ±.03
F	.300 ±.03

† Red band indicates fully mated

★ .059 dia. min. (1.5 dia. min.) 3 lockwire holes. Formed lockwire hole design (6 holes) is optional.

Shell Size	Part Number	A+ +.000 –.010	B Thread Class 2A 0.1P-0.3L-TS (Plated)	C Max	D1 +.010 –.000	D1 +.000 –.010	H Hex +.017 –.016	L Max	S ±.010	T+ +.010 –.000	KK +.011 –.000
9	**10-626**471-XXX	.669	.6250	1.199	.700	.670	.875	.357	1.062	.697	.642
11	472-XXX	.769	.7500	1.386	.825	.770	1.000	.357	1.250	.822	.766
13	473-XXX	.955	.8750	1.511	1.010	.955	1.188	.357	1.375	1.007	.892
15	474-XXX	1.084	1.0000	1.636	1.135	1.085	1.312	.357	1.500	1.134	1.018
17	475-XXX	1.208	1.1875	1.761	1.260	1.210	1.438	.357	1.625	1.259	1.142
19	476-XXX	1.333	1.2500	1.949	1.385	1.335	1.562	.381	1.182	1.384	1.268
21	477-XXX	1.459	1.3750	2.073	1.510	1.460	1.688	.381	1.938	1.507	1.392
23	478-XXX	1.575	1.5000	2.199	1.635	1.585	1.812	.381	2.062	1.634	1.518
25	479-XXX	1.709	1.6250	2.323	1.760	1.710	2.000	.381	2.188	1.759	1.642

All dimensions for reference only.

PCB Hermetic Solder Mounting Receptacle

Commercial

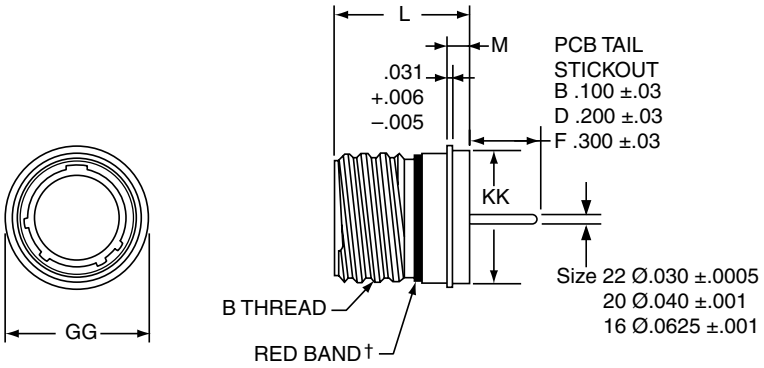

	1.	2.	3.	4.	5.	6.
PART # See chart below	Base Number	Coded Shell Size	Insert Arrg.	Contact Type/Alt. Keying	Shell Finish	Tail Length
	10-626	481	-35	P	1	B

HOW TO ORDER

1. BASE NUMBER:

10-626	Base Number for MIL-DTL-38999 Series III Hermetic with PCB Tail

2. SELECT A CODED SHELL SIZE:

See chart below 481-489, designates size 9-25 shell size.

3. SELECT AN INSERT ARRANGEMENT:

Refer to insert availability chart on page 2-5 and pin-out illustrations on pages 14-28. Please enter the second number which represents the Insert Arrangement number.

-35	Designates Insert Arrangement Number

4. CONTACT TYPE/ALTERNATE KEYING POSITIONS:

Refer to page 46 for alternate rotation letters to use.

P	Designates Pin Contacts in Normal Position
S	Designates Socket Contacts in Normal Position

5. SELECT A SHELL FINISH:

1	Hermetic seal, passivated Stainless Steel, 200°C
2	*Hermetic seal, Stainless Steel w/Nickel Plate
3	*Carbon Steel w/reflowed tin plate

6. SELECT A TAIL LENGTH:

B	.100±.03
D	.200±.03
F	.300±.03

† Red band indicates fully mated

Shell Size	Part Number	B Thread Class 2A 0.1P-0.3L-TS (Plated)	L +.011 –.005	M +.006 –.005	GG Dia. +.011 –.010	KK Dia +.011 –.005
9	**10-626**481-XXX	.6250	.806	.125	.750	.672
11	482-XXX	.7500	.806	.125	.844	.781
13	483-XXX	.8750	.806	.125	.969	.906
15	484-XXX	1.0000	.806	.125	1.094	1.031
17	485-XXX	1.1875	.806	.125	1.218	1.156
19	486-XXX	1.2500	.806	.125	1.312	1.250
21	487-XXX	1.3750	.806	.125	1.438	1.375
23	488-XXX	1.5000	.838	.156	1.563	1.500
25	489-XXX	1.6250	.838	.156	1.688	1.625

PCB Hermetic Weld Mounting Receptacle

Commercial

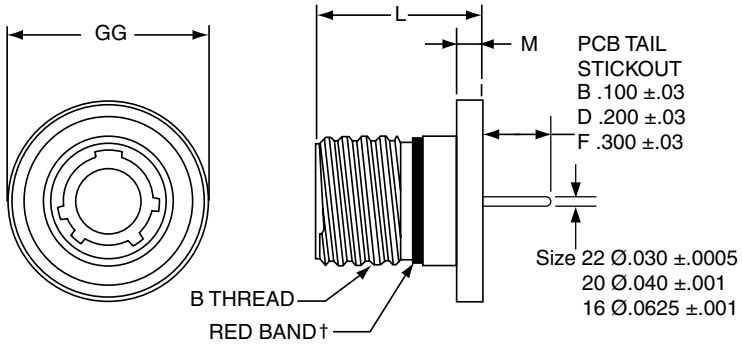

† Red band indicates fully mated

PART # See chart below	1. Base Number	2. Coded Shell Size	3. Insert Arrg.	4. Contact Type/Alt. Keying	5. Shell Finish	6. Tail Length
	10-626	491	-35	P	1	B

HOW TO ORDER

1. BASE NUMBER:

10-626	Base Number for MIL-DTL-38999 Series III Hermetic with PCB Tail

2. SELECT A CODED SHELL SIZE:

See chart below 491-499, designates size 9-25 shell size.

3. SELECT AN INSERT ARRANGEMENT:

Refer to insert availability chart on page 2-5 and pin-out illustrations on pages 14-28. Please enter the second number which represents the Insert Arrangement number.

-35	Designates Insert Arrangement Number

4. CONTACT TYPE/ALTERNATE KEYING POSITIONS:

Refer to page 46 for alternate rotation letters to use.

P	Designates Pin Contacts in Normal Position
S	Designates Socket Contacts in Normal Position

5. SELECT A SHELL FINISH:

1	Hermetic seal, passivated Stainless Steel, 200°C
2	*Hermetic seal, Stainless Steel w/Nickel Plate
3	*Carbon Steel w/reflowed tin plate

6. SELECT A TAIL LENGTH:

B	.100±.03
D	.200±.03
F	.300±.03

Shell Size	Part Number	B Thread Class 2A 0.1P-0.3L-TS (Plated)	L +.011 –.000	M +.006 –.005	GG Dia. +.011 –.010
9	**10-626**491-XXX	.6250	.806	.125	.973
11	492-XXX	.7500	.806	.125	1.095
13	493-XXX	.8750	.806	.125	1.221
15	494-XXX	1.0000	.806	.125	1.347
17	495-XXX	1.1875	.806	.125	1.434
19	496-XXX	1.2500	.806	.125	1.579
21	497-XXX	1.3750	.806	.125	1.721
23	498-XXX	1.5000	.838	.156	1.886
25	499-XXX	1.6250	.838	.156	1.973

* Not available for weld mount. All dimensions for reference only.

Hermetic Box Mounting Receptacle

Military (D38999/21), Commercial (TVPS02)

PART NUMBER BUILDER Page 42-46
ONLINE CONFIGURATOR www.amphenol-aerospace.com

MILITARY
D38999/21

Commercial

STAINLESS STEEL
TVPS02Y
TVPS02YN

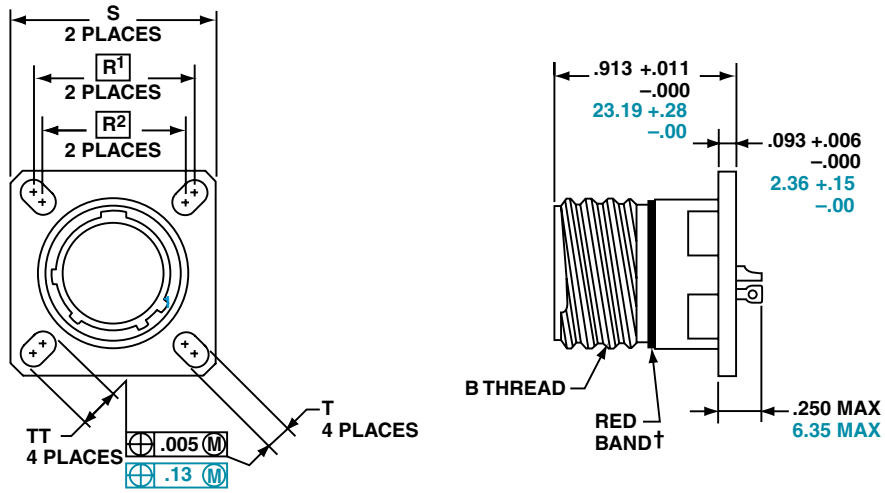

† Red band indicates fully mated

NOTE: Consult Amphenol Aerospace for availability of non-glass-sealed versions with printed circuit tail contacts.

Inches

Shell Size	MS Shell Size Coded	B Thread 0.1P-0.3L-TS (Plated)	R1	R2	S ±.010	T ±.008	TT ±.008
9	A	.6250	.719	.594	.938	.128	.216
11	B	.7500	.812	.719	1.031	.128	.194
13	C	.8750	.906	.812	1.125	.128	.194
15	D	1.0000	.969	.906	1.219	.128	.173
17	E	1.1875	1.062	.969	1.312	.128	.194
19	F	1.2500	1.156	1.062	1.438	.128	.194
21	G	1.3750	1.250	1.156	1.562	.128	.194
23	H	1.5000	1.375	1.250	1.688	.154	.242
25	J	1.6250	1.500	1.375	1.812	.154	.242

Millimeters

Shell Size	MS Shell Size Coded	R1	R2	S ±.25	T ±.20	TT ±.20
9	A	18.26	15.09	23.83	3.25	5.49
11	B	20.62	18.26	26.19	3.25	4.93
13	C	23.01	20.62	28.58	3.25	4.93
15	D	24.61	23.01	30.96	3.25	4.39
17	E	26.97	24.61	33.32	3.25	4.93
19	F	29.36	26.97	36.53	3.25	4.93
21	G	31.75	29.36	39.67	3.25	4.93
23	H	34.93	31.75	42.88	3.91	6.15
25	J	38.10	34.93	46.02	3.91	6.15

All dimensions for reference only

☐ Designates true position dimensioning

Hermetic Jam Nut Receptacle

Military (D38999/23), Commercial (TVS07)

PART NUMBER BUILDER Page 42-46
ONLINE CONFIGURATOR www.amphenol-aerospace.com

MILITARY
D38999/23

Commercial

STAINLESS STEEL
TVS07Y
TVS07YN

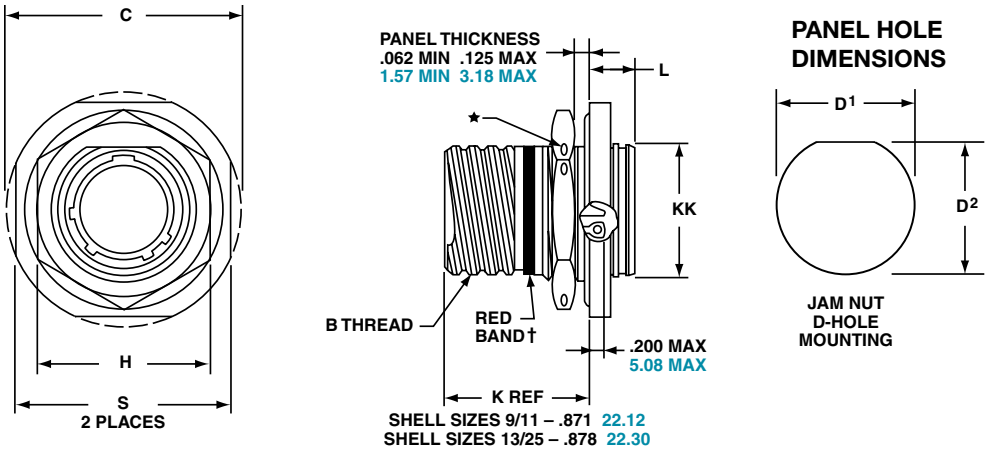

† Red band indicates fully mated
★ .059 dia min.
1.5 dia min. 3 lockwire holes Formed lockwire hole design (6 holes) is optional.

Inches

Shell Size	MS Shell Size code	B Thread Class 2A 0.1P-0.3L-TS (Plated)	C Max	D[1] +.010 –.000	D[2] +.000 –.010	H Hex +.017 –.016	L Max	S ±.010	KK +.011 –.000
9	A	.6250	1.199	.693	.657	.875	.357	1.062	.642
11	B	.7500	1.386	.825	.770	1.000	.357	1.250	.766
13	C	.8750	1.511	1.010	.955	1.188	.357	1.375	.892
15	D	1.0000	1.636	1.135	1.085	1.312	.357	1.500	1.018
17	E	1.1875	1.761	1.260	1.210	1.438	.357	1.625	1.142
19	F	1.2500	1.949	1.385	1.335	1.562	.381	1.812	1.268
21	G	1.3750	2.073	1.510	1.460	1.688	.381	1.938	1.392
23	H	1.5000	2.199	1.635	1.585	1.812	.381	2.062	1.518
25	J	1.6250	2.323	1.760	1.710	2.000	.381	2.188	1.642

Millimeters

Shell Size	MS Shell Size code	C Max	D[1] +.25 –.00	D[2] +.00 –.25	H Hex +.43 –.41	L Max	S ±.25	KK +.28 –.00
9	A	30.45	17.60	16.70	22.23	9.07	26.97	16.31
11	B	35.20	20.96	19.59	25.40	9.07	31.75	19.46
13	C	38.38	25.65	24.26	30.18	9.07	34.93	22.66
15	D	41.55	28.83	27.56	33.32	9.07	38.10	25.86
17	E	44.73	32.01	30.73	36.53	9.07	41.28	29.01
19	F	49.50	35.18	33.91	39.67	9.68	46.02	32.21
21	G	52.65	38.35	37.08	42.80	9.68	49.23	35.36
23	H	55.85	41.53	40.26	46.02	9.68	52.37	38.56
25	J	59.00	44.70	43.43	50.80	9.68	55.58	41.71

All dimensions for reference only

Hermetic Solder Mounting Receptacle

Military (D38999/25), Commercial (TVSI)

PART NUMBER BUILDER Page 42-46
ONLINE CONFIGURATOR www.amphenol-aerospace.com

MILITARY
D38999/25

Commercial

STAINLESS STEEL
TVSIY
TVSIYN

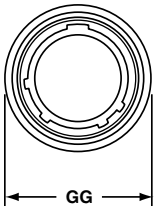

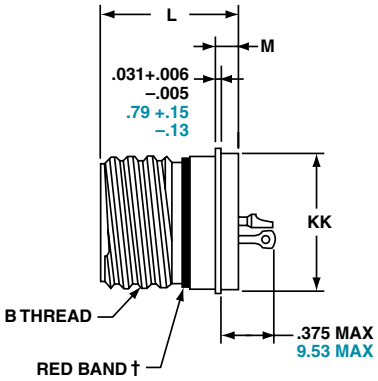

† Red band indicates fully mated

Inches

Shell Size	MS Shell Size Code	B Thread Class 2A 0.1P-0.3L-TS (Plated)	L +.011 –.005	M +.006 –.005	GG Dia. +.011 –.010	KK Dia +.011 –.005
9	A	.6250	.806	.125	.750	.672
11	B	.7500	.806	.125	.844	.781
13	C	.8750	.806	.125	.969	.906
15	D	1.0000	.806	.125	1.094	1.031
17	E	1.1875	.806	.125	1.218	1.156
19	F	1.2500	.806	.125	1.312	1.250
21	G	1.3750	.806	.125	1.438	1.375
23	H	1.5000	.838	.156	1.563	1.500
25	J	1.6250	.838	.156	1.688	1.625

Millimeters

Shell Size	MS Shell Size Code	L +.28 –.00	M +.15 –.13	GG Dia. +.28 –.25	KK Dia +.03 –.13
9	A	20.47	3.18	19.05	17.07
11	B	20.47	3.18	21.44	19.84
13	C	20.47	3.18	24.61	23.01
15	D	20.47	3.18	27.79	26.19
17	E	20.47	3.18	30.94	29.36
19	F	20.47	3.18	33.32	31.75
21	G	20.47	3.18	36.53	34.93
23	H	21.29	3.96	39.70	38.10
25	J	21.29	3.96	42.88	41.28

Hermetic Wall Mounting Receptacle

Military (D38999/27), Commercial (TVSHIY)

PART NUMBER BUILDER Page 42-46
ONLINE CONFIGURATOR
www.amphenol-aerospace.com

MILITARY
D38999/27

Commercial

STAINLESS STEEL
TVSHIY
TVSHIYN

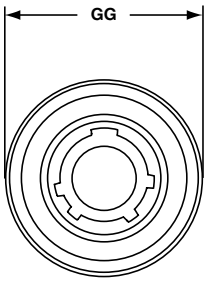

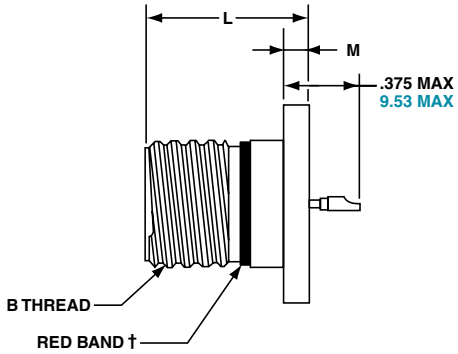

† Red band indicates fully mated

Inches

Shell Size	MS Shell Size Code	B Thread Class 2A 0.1P-0.3L-TS (Plated)	L +.011 –.000	M +.006 –.005	GG Dia. +.011 –.010
9	A	.6250	.806	.125	.973
11	B	.7500	.806	.125	1.095
13	C	.8750	.806	.125	1.221
15	D	1.0000	.806	.125	1.347
17	E	1.1875	.806	.125	1.434
19	F	1.2500	.806	.125	1.579
21	G	1.3750	.806	.125	1.721
23	H	1.5000	.838	.156	1.886
25	J	1.6250	.838	.156	1.973

Millimeters

Shell Size	MS Shell Size Code	L +.28 –.00	M +.15 –.13	GG Dia. +.25 –.00
9	A	20.47	3.18	24.71
11	B	20.47	3.18	27.81
13	C	20.47	3.18	31.01
15	D	20.47	3.18	34.21
17	E	20.47	3.18	36.42
19	F	20.47	3.18	40.11
21	G	20.47	3.18	43.71
23	H	21.29	3.96	47.90
25	J	21.29	3.96	50.11

All dimensions for reference only

Series III, TV Breakaway Fail-Safe Connectors

Quick-Disconnect with an Axial Pull of Lanyard

Amphenol® Tri-Start Breakaway Fail-Safe Connectors provide unequaled performance in environments requiring instant disengagement.
The "Breakaway" Fail-Safe connector family offers a wide range of electrical and mechanical features:

- Instant decoupling and damage free separation
- Completely intermateable with standard receptacles (D38999/20 and /24)
- Inventory support commonality through the use of standard insert arrangements and contacts

Breakaway unmating is initiated by applying a pull force to the lanyard which causes the operating sleeve on the plug to move away from the receptacle. Coupling segments on the plug then move away from the mating receptacle while expanding, thus releasing the receptacle. After completion of the unmating sequence, spring compression returns the sleeve and segments to their original positions. Unmating of the plug may also be accomplished by normal rotation of the coupling ring without affecting the breakaway capability.

TYPE 2 TYPE 6 TYPE 1

Amphenol offers a variety of lanyard plug styles including MIL-STD-1760 types 1, 2 and 6 for Stores Management applications.

The Tri-Start Breakaway Fail-Safe connector exceeds the MIL-Spec Series III requirements for EMI/EMP shielding and features include:

- Solid metal-to-metal coupling
- EMI grounding fingers
- Conductive finishes

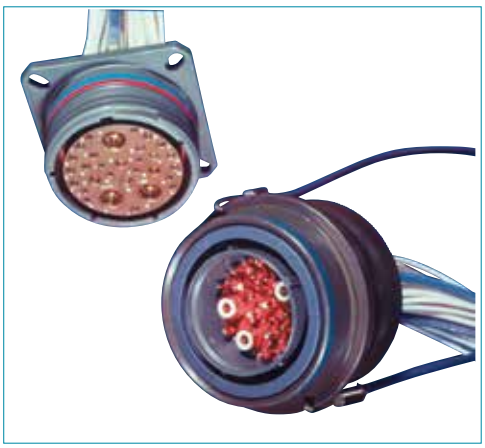

Breakaway with Coax Contacts

Amphenol Breakaway Fail-Safe connectors are qualified to MIL-DTL-38999/29, /30 and /31 (for MIL-STD-1760 Stores Management applications). Amphenol also manufactures custom breakaway connectors including those with:

- Highly durable non-metallic operating sleeves in a variety of lengths and diameters
- Increased pull-force capability
- Low-profile designs
- Custom lanyard lengths and backshells
- Low force separation capabilities
- Low insertion/separation force contacts
- Non-cadmium finishes

Contact your local Amphenol representative. Whether you need a standard Breakaway, one of our custom Breakaways, or a unique Breakaway design.

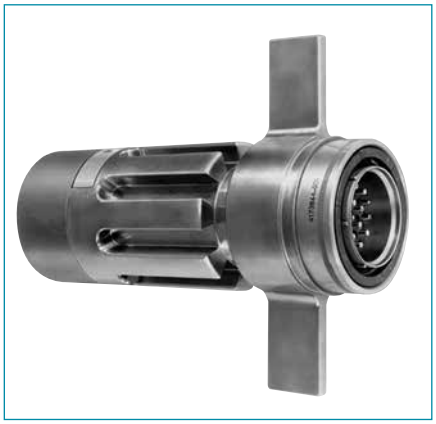

Special configuration Fail-Safe used on space telescope application. Lanyard is replaced by a swivel ring for remote disconnect and "wing arms" have been added for manual actuation accessibility by gloved astronauts.

TV Breakaway Fail-Safe Lanyard Release Plug

Military (D38999/29 & D38999/30)

Amphenol Aerospace

HOW TO ORDER - MILITARY

1. DOD Number Prefix	2. Spec Sheet Number	3. Service Class	4. Shell Size	5. Insert Arrangement	6. Lanyard Length Code	7. Alternate Keying Position
D38999/	29	F	E	35	P	N

1. DOD NUMBER PREFIX

D38999/	Designates MIL-DTL-38999, Series III, Tri-Start Connector

2. SPECIFICATION SHEET NUMBER

29	Lanyard Release Plug with pin contacts
30	Lanyard Release Plug with socket contacts

3. SERVICE CLASS

F	Designates electroless nickel plated aluminum, optimum EMI shielding effectiveness –65dB@10 GHz specification min., 48 hour salt spray, 200°C
W	Designates corrosion resistant olive drab cadmium plate aluminum, 500 hour extended salt spray, EMI –50dB@10 GHz specification min., 175°C

4. & 5. INSERT AVAILABILITY

Shell Size- Insert Arrangement	Military Shell Size- Insert Arrangement	Commercial Basic Part# Shell & Insert Arrg. Code	Service Rating	Total Contacts	Contact Size						
					22D	20	16	12	12 Coax	8 Coax	8 Twinax
11-2	N/A	88/91-556508	I	2			2				
11-35	N/A	06	M	13	13						
11-98	N/A	07	I	6		6					
13-4	N/A	10	I	4			4				
13-8	N/A	11	I	8		8					
13-35	N/A	14	M	22	22						
13-98	N/A	13	I	10		10					
15-5	N/A	18	II	5			5				
15-15	N/A	23	I	15		14	1				
15-18	N/A	22	I	18		18					
15-19	N/A	19	I	19		19					
15-35	N/A	20	M	37	37						
15-97	N/A	21	I	12		8	4				
17-6	E-6	27	I	6				6			
17-8	E-8	28	II	8			8				
17-26	E-26	29	I	26		26					
17-35	E-35	30	M	55	55						
17-99	E-99	31	I	23		21	2				
19-11	F-11	37	II	11			11				
19-32	F-32	39	I	32		32					
19-35	F-35	40	M	66	66						
21-11	G-11	47	I	11				11			
21-16	G-16	48	II	16			16				
21-35	G-35	49	M	79	79						
21-39	G-39	51	I	39		37	2				
21-41	G-41	50	I	41		41					
23-21	H-21	57	II	21			21				
23-35	H-35	58	M	100	100						
23-53	H-53	59	I	53		53					
23-54	H-54	61	M	53	40		9	4			
23-55	H-55	60	I	55		55					
25-4	J-4	71	I	56		48	8				
25-19	J-19	66	I	19				19			
25-20	J-20	74	N	30		10	13		4		3
25-24	J-24	72	I	24			12	12			
25-29	J-29	67	I	29			29				
25-35	J-35	68	M	128	128						
25-43	J-43	69	I	43		23	20				
25-46	J-46	73	I	46		40	4			2*	
25-61	J-61	70	I	61		61					

TV Breakaway Fail-Safe Lanyard Release Plug

Military (D38999/29 & D38999/30)

6. MILITARY LANYARD LENGTH CODE

Table II

Lanyard Length (in.) ± .236	Lanyard Length (mm) ± 6.0	Lanyard Length Code For Part Number
4.016	102	A
4.528	115	B
5.000	127	C
5.512	140	D
6.024	153	E
6.535	166	F
7.008	178	G
7.520	191	H
7.992	203	I
8.503	216	J
9.016	229	K
9.528	242	L
10.000	254	M
10.512	267	N
11.024	280	P
11.535	293	R
12.008	305	S
12.520	318	T
13.031	331	U
14.016	356	V
15.000	381	W
16.024	407	X
17.008	432	Y
18.031	458	Z

7. MILITARY ALTERNATE KEYING POSITION

For alternate positions of connector (to prevent cross-mating) (N indicates normal).

Shell Size	Key & Keyway Arrangement Identification Letter	AR° or AP° BSC	BR° or BP° BSC	CR° or CP° BSC	DR° or DP° BSC
7, 7H	N*	120	240	NA	NA
	A	132	248		
	B	80	230		
	C	140	275		
	D	155	234		
	E	131	197		
9	N*	105	140	215	265
	A	102	132	248	320
	B	80	118	230	312
	C	35	140	205	275
	D	64	155	234	304
	E	91	131	197	240
11, 13, and 15	N*	95	141	208	236
	A	113	156	182	292
	B	90	145	195	252
	C	53	156	220	255
	D	119	146	176	298
	E	51	141	184	242
17 and 19	N*	80	142	196	293
	A	135	170	200	310
	B	49	169	200	244
	C	66	140	200	257
	D	62	145	180	280
	E	79	153	197	272
21, 23, and 25	N*	80	142	196	293
	A	135	170	200	310
	B	49	169	200	244
	C	66	140	200	257
	D	62	145	180	280
	E	79	153	197	272
25L, 33, and 37	N*	80	142	188	293
	A	135	170	188	310
	B	49	169	188	244
	C	66	140	188	257
	D	62	145	188	280
	E	79	153	188	272

RECEPTACLE (FRONT FACE SHOWN)

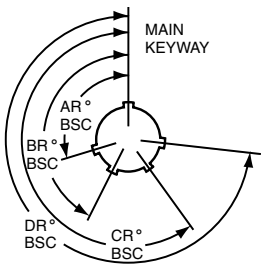

PLUG (FRONT FACE SHOWN)

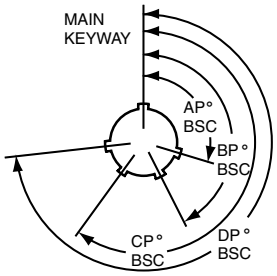

HOW TO ORDER - COMMERCIAL

Ordering procedure for example part number 88-556529-EP is shown below:

1. Service Class	2. Connector Type Identification	3. Shell Size & Insert Arrg. Code	4. Required Field	5. Lanyard Length Code	6. Contact Type/Alternate Keying Position
88	-5565	29	0	E	P

1. SERVICE CLASS

88	Designates corrosion resistant olive drab cadmium plate over nickel, 500 hour extended salt spray, EMI –50dB @ 10 GHz specification min., 175°C
91	Designates electroless nickel plated aluminum, optimum EMI shielding effectiveness –65dB @ 10 GHz specification min., 48 hour salt spray, 200°C

These are standard finishes. Consult Amphenol Aerospace for other variations.

2. CONNECTOR TYPE IDENTIFICATION

-5565	Designates MIL-DTL-38999, Series III Tri-Start Lanyard Release Plug

3. SELECT A COMMERCIAL SHELL SIZE & INSERT ARRANGEMENT CODE

MIL-DTL-38999, see insert availability chart on page 71.

4. REQUIRED FIELD

0	THE REQUIRED FIELD IS ALWAYS A 0

5. SELECT A LANYARD LENGTH CODE

Lanyard Length (in.) ± .236	Lanyard Length (mm) ± 6.0	Lanyard Length Code For Part Number
4.016	102	A
4.528	115	B
5.000	127	C
5.512	140	D
6.024	153	E
6.535	166	F
7.008	178	G
7.520	191	H
7.992	203	I
8.503	216	J
9.016	229	K
9.528	242	L
10.000	254	M
10.512	267	N
11.024	280	P
11.535	293	R
12.008	305	S
12.520	318	T
13.031	331	U
14.016	356	V
15.000	381	W
16.024	407	X
17.008	432	Y
18.031	458	Z

6. SELECT A CONTACT TYPE/ALTERNATE KEYING POSITION

P designates pin, S designates socket for normal positioning of contacts. When an alternate position of the connector is required to prevent cross-mating, a different letter (other than P or S) is used. See alternate positioning on page 72, then convert to Amphenol Commercial coding by the following chart.

Pin Contacts		Socket Contacts	
MS Letter	Amphenol letter	MS Letter	Amphenol Letter
PN	P (normal)	SN	S (normal)
PA	G	SA	H
PB	I	SB	J
PC	K	SC	L
PD	M	SD	N
PE	R	SE	T

Fail-Safe Lanyard Release Plug-Crimp, Metal

Military (D38999/29 & D38999/30), Commercial (88-5565 & 91-5565)

PART NUMBER BUILDER Page 71-73
ONLINE CONFIGURATOR www.amphenol-aerospace.com

MILITARY
D38999/29 Pin
D38999/30 Socket

Commercial

STAINLESS STEEL
88-5565
91-5565

METAL

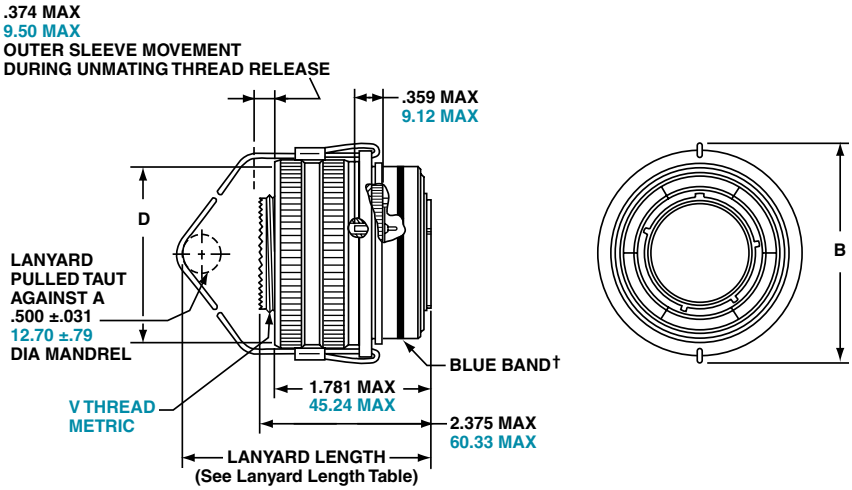

† Blue band indicates rear release contact retention system

Inches

Shell Size	MS Shell Size Code	B Max	D Max Accessory Dia.
11	B	1.846	1.109
13	C	1.972	1.250
15	D	2.079	1.375
17	E	2.205	1.500
19	F	2.301	1.625
21	G	2.472	1.750
23	H	2.594	1.875
25	J	2.705	2.000

Millimeters

Shell Size	MS Shell Size Code	B Max	D Max Accessory Dia.	V Thread Metric
11	B	46.89	28.17	M15X1.0-6g
13	C	50.09	31.75	M18X1.0-6g
15	D	52.81	34.93	M22X1.0-6g
17	E	56.01	38.10	M25X1.0-6g
19	F	58.45	41.28	M28X1.0-6g
21	G	62.79	44.45	M31X1.0-6g
23	H	65.89	47.63	M34X1.0-6g
25	J	68.71	50.08	M37X1.0-6g

Applications- Lanyard Release Plug

HOW TO ORDER - BY MILITARY PART NUMBER FAIL-SAFE D38999/31

Ordering procedure for example part number D38999/31WE20PN1 is shown below:

1. DOD Number Prefix	2. Spec Sheet Number	3. Service Class	4. Lanyard Length Code	5. Insert Arrangement	6. Contact Style	7. Alternate Keying Position	8. Type Number
D38999/	31	W	E	20	P	N	1

1. DOD NUMBER PREFIX

D38999/	MIL-DTL-38999, Series III Tri-Start Connectors

2. SPECIFICATION SHEET NUMBER

31	Designates Lanyard Release Plug for MIL-STD-1760 with pin contacts

3. SERVICE CLASS

F	Electroless nickel plated aluminum, optimum EMI shielding effectiveness –65dB @ 10 GHz specification min., 48 hour salt spray, 200°C
W	Corrosion resistant olive drab cadmium plate aluminum, 500 hour extended salt spray, EMI –50dB @ 10 GHz specification min., 175°C

4. LANYARD LENGTH CODE

Lanyard Length (in.) ±.236	Lanyard Length (mm.) ± 6.0	Lanyard Length Code for Part Number
6.024	153.0	E
6.535	166.0	F
7.008	178.0	G
7.520	191.0	H
7.992	203.0	I
8.504	216.0	J
9.016	229.0	K
9.528	242.0	L

5. INSERT ARRANGEMENT

11	25-11
20	25-20

6. CONTACT STYLE-P & A ARE VALID OPTIONS

P	Replaces the “no designation” option in the PIN on revision C and earlier revision of the Mil-Spec.
A	Designates supplied less contacts.

7. ALTERNATE KEYING POSITION

N	Is required for normal position.

8. TYPE NUMBER
TYPE 1, 2 OR 6. SEE DRAWINGS ON PAGE 76.

For accessories for lanyard release plugs see Accessories section.

MILITARY
D38999/31

TYPE 6
88-555875/76
91-555875/76

TYPE 2
88-558518/19
91-558518/19

TYPE 1-Longer Shell
T3W-16B25-XXXX

TV Breakaway Fail-Safe Lanyard Release

Military (D38999/31) for MIL-STD-1760 Crimp, Metal

PART NUMBER BUILDER
Page 75

MILITARY
D38999/31

TYPE 6
88-555875/76
91-555875/76

TYPE 2
88-558518/19
91-558518/19

TYPE 1
T3W-16B25-XXXX

PIN CONTACTS ONLY, SHELL SIZE 25 ONLY

TYPE 6

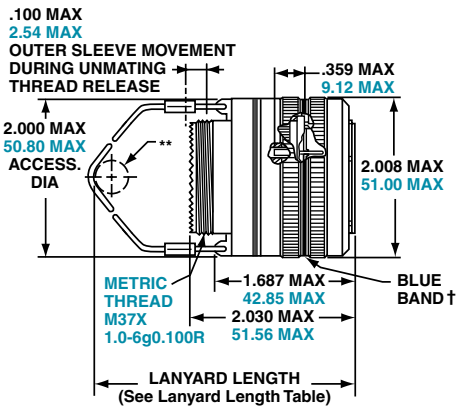

TYPE 2

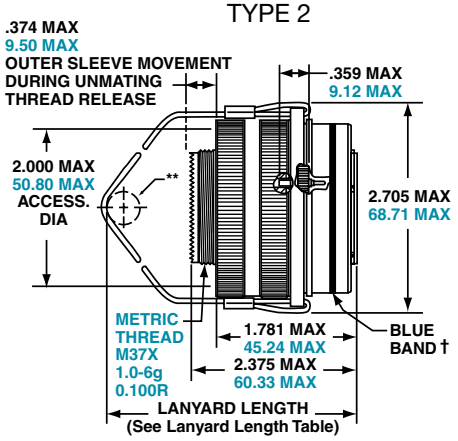

TRI-START LANYARD SEPARATION FORCES		
Shell Size	Straight Plug (lbs. max.)	15 Degree Pull (lbs. max.)
25	90	100

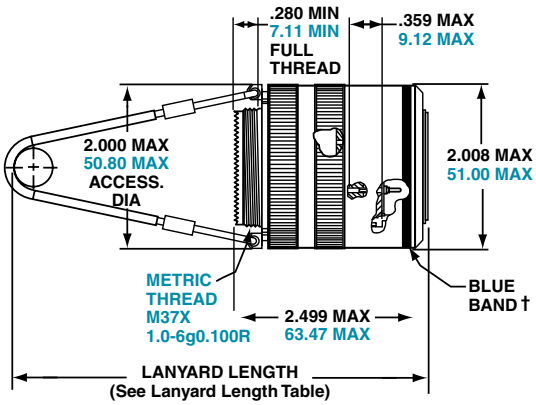

TYPE 1
(LONGER SHELL)

† Blue band indicates rear release contact retention system

** Lanyard pulled taut against a .500 ± .13 dia. Mandrel

All dimensions for reference only

INSERT AVAILABILITY FAIL SAFE D38999/31 FOR MIL-STD-1760

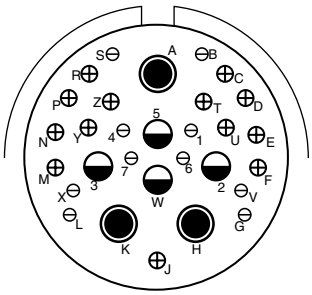

25-20 PRIMARY INTERFACE SIGNAL SET

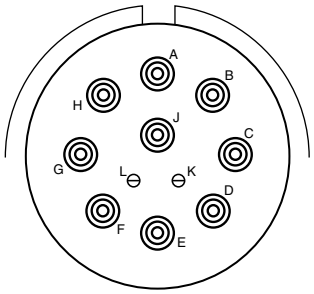

25-11 AUXILIARY POWER SIGNAL SET

PIN CONTACT DATA FOR MIL-STD-1760						
Insert Arrangement	Service Rating	Total Contacts	Contact			
			20	16	12 (Coax)	8 (Twinax)
25-20	N	30	10	13	4	3

CONTACTS FOR 25-20 PATTERN							
Shell Size	Arrg. Number	Number of Contacts	Size Contacts	Service Rating	Contact Location	Standard Contacts	
						Pin	Socket
25	-20	3	8	Twinax	A, H, K	M39029/90-529	M39029/91-530
		4	12	Coax	2,3	M39029/28-211	M39029/75-416
					W, 5	M39029/102-558	M39029/103-559
		13	16	N	C, D, E, F, J, M, N, P, R, T, U, Y, Z	M39029/58-364	M39029/56-352
		10	20	N	B, G, L, S, V, X, 1, 4, 6, 7	M39029/58-363	M39029/56-351

Insert Arrangement	Service Rating	Total Contacts	Contact Size	
			20	10 (power)
25-11	N	11	2	9

Contact Legend

8 (twinax) 10 (power) 12 (coax) 16 20

TV Breakaway Fail-Safe Lanyard Release

Commercial version of D38999/31, Type 6

Amphenol Aerospace

QUICK-DISCONNECT WITH AN AXIAL PULL OF LANYARD

Amphenol offers a commercial version of D38999/31 series III, type 6 connectors. Built from the same time-tested and quality components used in its Mil-Spec counterpart, Amphenol's commercial variant is designed to accept a wider variety of insert arrangements the Mil-Spec does not include. Available in shell size 25, these fail-safe connectors adopt an incredible amount of versatility without sacrificing performance or durability. Consult Amphenol Aerospace for more information.

FEATURES AND BENEFITS

- More versatile than the mil-spec
- 25 lanyards lengths
- Available in all size 25 arrangements
- Low force separation capabilities
- Compatible with all mil-spec backshells and accessories
- Mates to existing D38999 receptacles

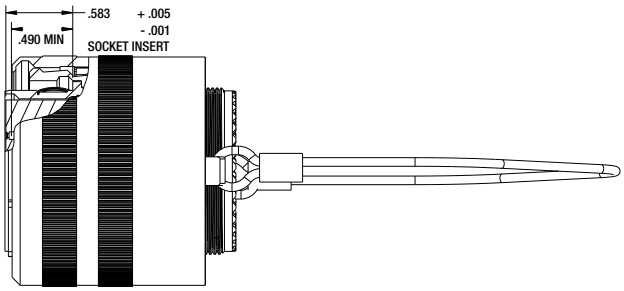

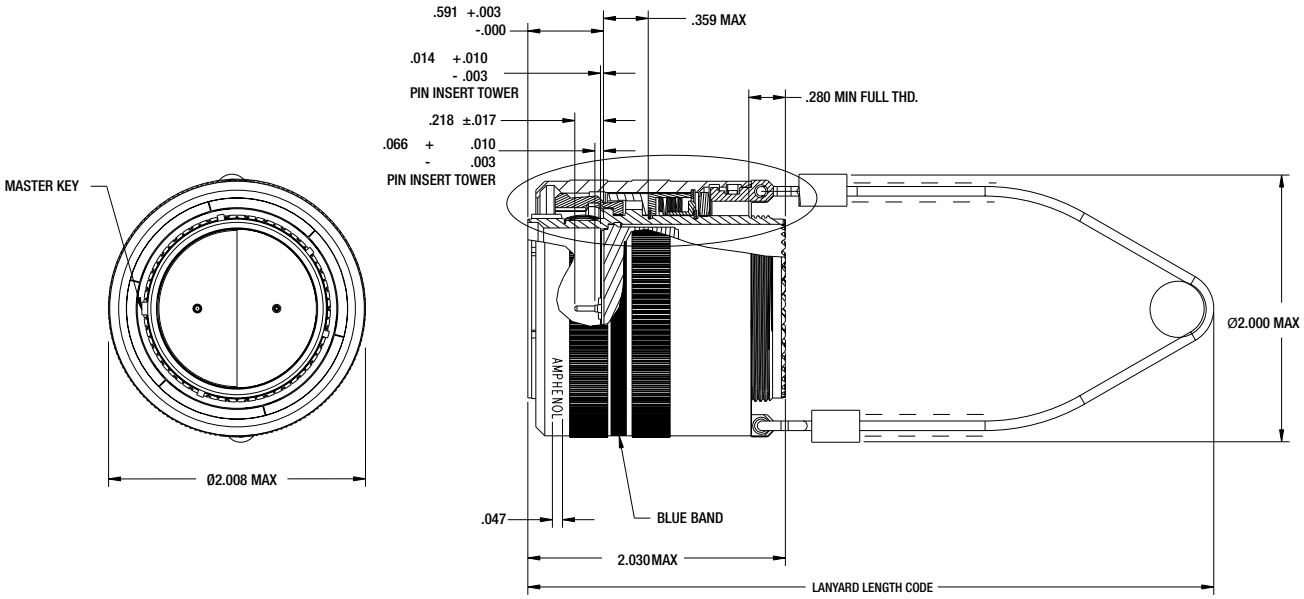

TV Breakaway Fail-Safe Lanyard Release Connector

Commercial (88-725010, 88-725014, 88-725041) Version of D38999/31 Type 6

HOW TO ORDER

1. Service Class	2. Shell Style	3. Insert Arrg.	4. Alternate Keying Position (End A)	5. Lanyard Length Code
88	725010-	04	P	K

1. FINISH*

88-	Olive Drab Cadmium
91-	Electroless Nickel

* Contact Amphenol for availability of other finishes.

2. SHELL STYLE

725010-	D38999/31 Type 6
725014-	Extended Backskirt
725041-	Integrated Banding Platform

3. INSERT ARRANGEMENT

04	25-4
07	25-7
11	25-11
17	25-17
20	25-20
24	25-24
26	25-26
29	25-29
35	25-35
37	25-37
41	25-41
43	25-43
46	25-46
61	25-61
62	25-62
90	25-90
F4	25-F4
187	25-187

4. KEYING

Key Position	Pin	Socket
N	P	S
A	G	H
B	I	J
C	K	L
D	M	N
E	R	T

5. LANYARD LENGTH CODE

Lanyard Length (in.) ± .236	Lanyard Length (mm) ± 6.0	Lanyard Length Code For Part Number
4.016	102	A
4.528	115	B
5.000	127	C
5.512	140	D
6.024	153	E
6.535	166	F
7.008	178	G
7.520	191	H
7.992	203	I
8.503	216	J
9.016	229	K
9.528	242	L
10.000	254	M
10.512	267	N
11.024	280	P
11.535	293	R
12.008	305	S
12.520	318	T
13.031	331	U
14.016	356	V
15.000	381	W
16.024	407	X
17.008	432	Y
18.031	458	Z

INSERT ARRANGEMENTS

Shell Size & Insert Arrg. for:

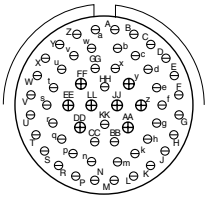
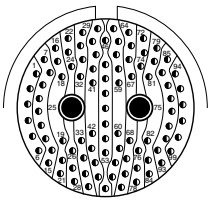
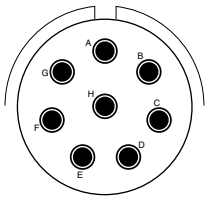
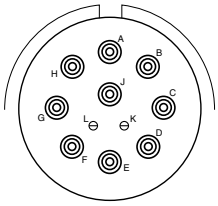

Series III TV	25-04		25-07		25-08	25-11***	
Service Rating	I		M		Twinax	N	
Number of Contacts	48	8	97	2	8	2	9
Contact Size	20	16	22D	8 Twinax	8 Twinax	20	10

Shell Size & Insert Arrg. for:

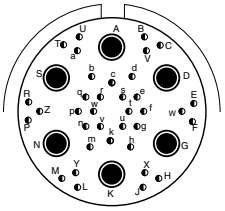
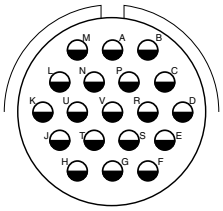
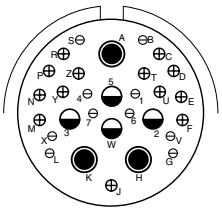
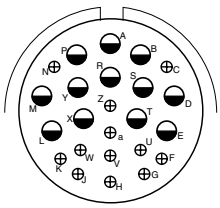

Series III TV	25-17		25-19	25-20***				25-24	
Service Rating	M		I	N				I	
Number of Contacts	36	6	19	10	13	3	4	12	12
Contact Size	22D	8 Twinax	12	20	16	8 Twinax	12 Coax	16	12

Insert Arrangements

Commercial (88-725010 & 88-725014) Version of D38999/31 Type 6

Amphenol Aerospace

Shell Size & Insert Arrg. for:

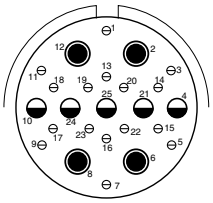
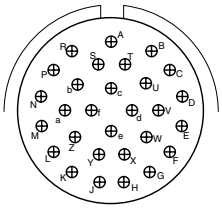
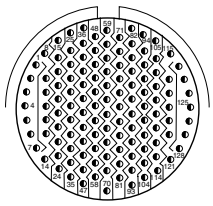
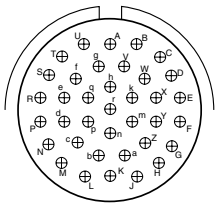

Series III TV	25-26			25-29	25-35	25-37
Service Rating	I			I	M	I
Number of Contacts	16	5	4	29	128	37
Contact Size	20	12	8 Coax	16	22D	16

Shell Size & Insert Arrg. for:

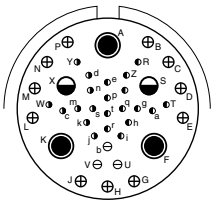
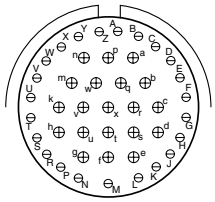
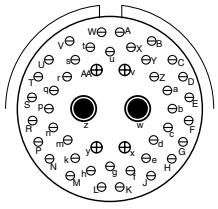
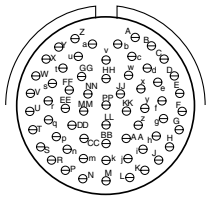

Series III TV	25-41					25-43		25-46			25-61
Service Rating	N/Inst.					I		I			I
Number of Contacts	22	3	11	2	3	23	20	40	4	2	61
Contact Size	22D	20	16	12 Coax	8 Twinax	20	16	20	16	8 Coax †	20

Shell Size & Insert Arrg. for:

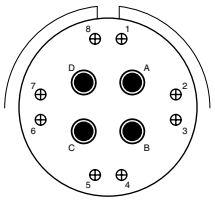
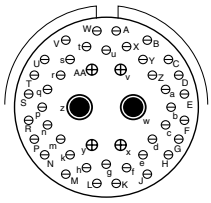
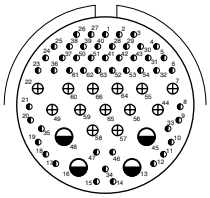
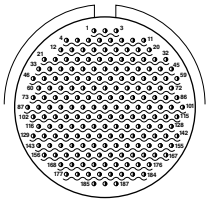

Series III TV	25-62		25-90			25-F4			25-187 HD
Service Rating	I		I			Size 22D=M, Balance =I			N
Number of Contacts	8	4	40	4	2	49	13	4	187
Contact Size	16	8	20	16	8 Twinax	22D	16	12	23
	Ground Plane Only								

SPECIALS

Shell Size & Insert Arrg. for:

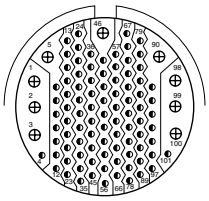
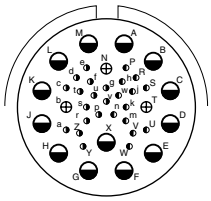
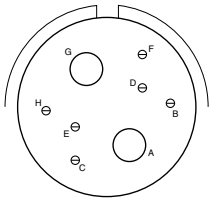
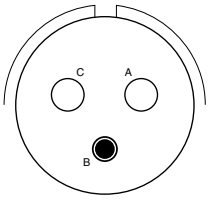
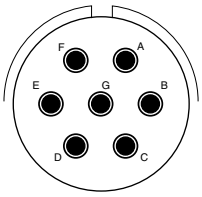

Series III TV	25-92		25-97			25-16		25L-3		25L-7
Service Rating	M		M			M		II		II
Number of Contacts	92	9	26	3	13	6	2	1	2	7
Contact Size	22D	16	22D	16	12	20	4	8	4	8

TV Breakaway Fail-Safe Lanyard Release Connector

Commercial (88-725014 & 88-725041) Version of D38999/31 Type 6

88-725041 INTEGRATED BANDING PLATFORM

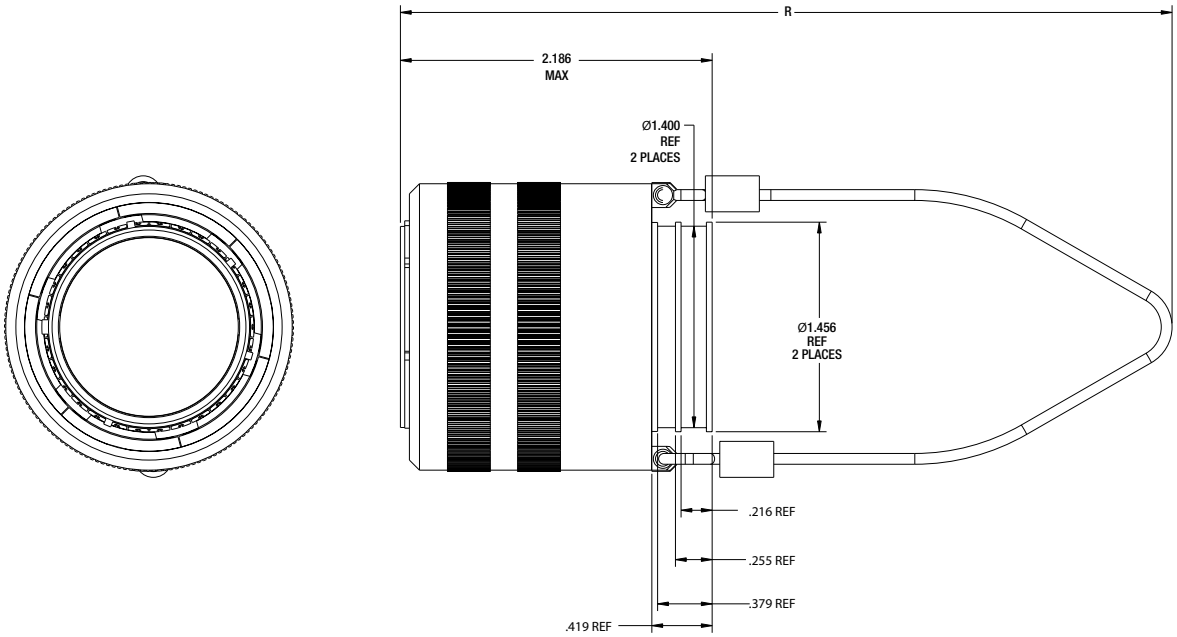

88-725014 EXTENDED BACKSKIRT

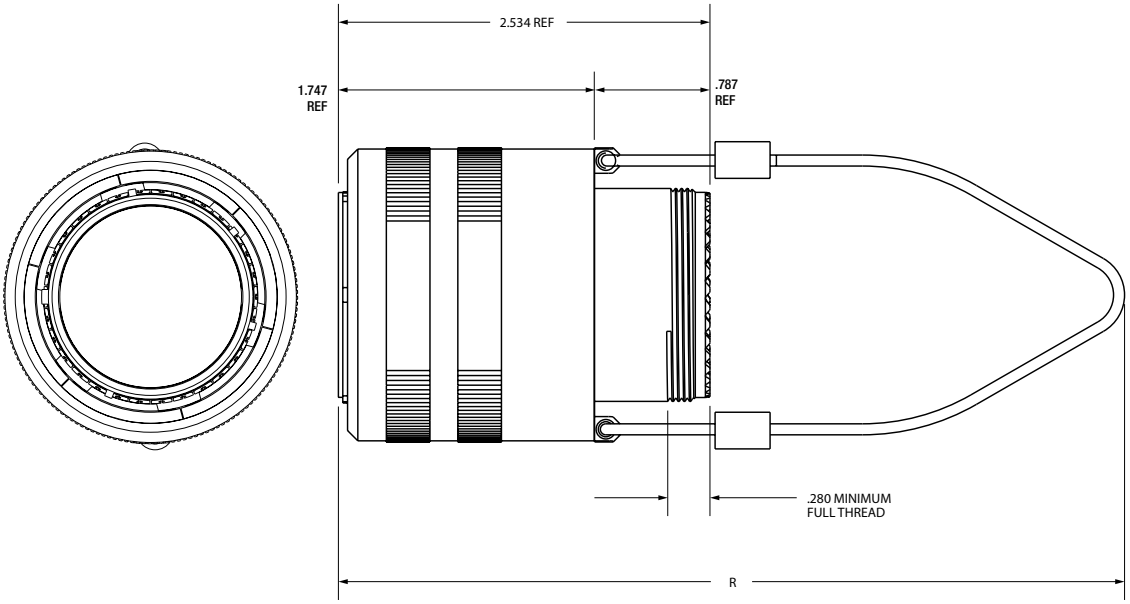

Lower Profile Lanyard Release Plug, Crimp

METAL SHELLS WITH COMPOSITE OPERATING SLEEVE

New Hybrid Lanyard Breakaway Fail-Safe connector with a composite thermoplastic outer operating sleeve for greater durability.

This new hybrid breakaway is the breakaway of choice for the Navy F-18 Program. Amphenol's hybrid lanyard design offers greater durability over D38999 aluminum and composite designs because of its ability to handle abuse taken after weapons release.

Other advantages include:

- Lower profile compared to full metal breakaway Fail-Safe connectors
- Less weight

This Hybrid Breakaway meets the applicable requirements of MIL-DTL-38999/31 including random & sine vibration, ice resistance, fluid immersion and hydrolytic stability tests.
(Test reports are available upon request).

Currently the hybrid breakaway is available in shell sizes 25 and 17. It uses standard inserts available for breakaway plugs sizes 25 and 17, and is also available with inserts 25-20 and 25-11 for MIL-STD-1760. These hybrid connectors will accommodate the standard backshells for breakaway connectors shown on Accessories section or the backshell section.

Consult Amphenol Aerospace for ordering of the new hybrid breakaway connectors.

New Hybrid Lanyard Release Plugs (Metal inside shells and Composite, lower profile outer sleeves)

CONDITION/TEST	DESCRIPTION	REFERENCE
Durability	400 complete mating/unmating cycles	MIL-DTL-38999/31D
High Impact Shock	Nine hammer blows from 1,3 and 5 feet, three each in three axes on mounting panel.	MIL-S- 901D
Vibration	10 to 2000Hz in three perpendicular axes, 4 hours in each axis for a total of 12 hours with no fracturing or breaking of parts.	MIL-STD-202F, Method 204
Ice Resistance	Pull tested after conditioned with Ice water at -18C for 35 minutes.	MIL-DTL-38999/31D
Fail Safe Disengagement	Rotationaly unmated 180° from full mate position and pull tested in both a straight direction and at 15°.	MIL-DTL-38999/31D
High Speed Pull Separation	100 cycles at 30 feet per second.	MIL-DTL-38999/31D

STORES MANAGEMENT TYPE II, RAIL LAUNCH

Plugs and Receptacles that meet MIL-STD-1760

Amphenol provides a Breakaway Rail Launch connector that is designed for use on aircraft that carry rail launch missiles such as AMRAAM.

These connectors are designed for blindmating of stores on rail launch applications. They consist of a buffer plug and a missile receptacle that meet the specifications of MIL-STD-1760 Stores Management.

Other features and benefits include:

- Designed to MIL-C-83538 specifications
- Bayonet and push pull coupling
- Use standard MIL-DTL-38999 crimp termination with power, coax and twinax contacts also available
- Buffer provides flame barrier
- Buffers are replaceable

Consult Amphenol Aerospace for more information and ordering.

Stores Management Type II Rail Launch Connectors

X-ON Electronics

Largest Supplier of Electrical and Electronic Components

Click to view similar products for Circular MIL Spec Connector ***category:***

Click to view products by Amphenol ***manufacturer:***

Other Similar products are found below :

89075GULPR 0025-262-542 0025-264-3014 58-570121-04S 0134-213-1208 0134-213-2209 0025-258-000 60-042022-07P 60-042022-19P 60-042022-23P 60-042217-10P 60-042217-11P 0114-201-1278 012-0467-000 602GB06EG24-61SN 0134-201-1207 0134-213-1006 6104-207-2302 6104-208-1902 61-168211-04P 61-168617-10P 6131-202-19149P 6131-204-21149P 6131-208-13149P 6131-209-17149P 6131-210-11149P 6131-211-19149P 6131-216-19149P 6131-259-21149P 6131-259-23149P 6131-265-17149P 6131-265-19149P CS3100A18-1P-472 CS3100A-36-77P CS3101A-16-55P CS3102A-10SL-55P CS3102A-14S-58P CS3102A-18-1P116 CS3102A-32-17P CS3102A32-25S CS3102C18-4P-472 CS3106A10SL3S004 CS3106A-18-73S CS3108A-14S-52S CS3108A-28-51S 6162-233-1277 6162-324-1231 M243082296Z M2884010AC1S1 CT0-24-10SC