L-Series and L-Series with LED Indoor Selectable Horns, Strobes and Horn Strobes

System Sensor L-Series and L-Series with LED audible visible notification products are rich with features guaranteed to cut installation times and maximize profits with lower current draw and modern aesthetics.

Features

- LED technology provides lower current draw
- Digital Voltage Meter (DVM) diagnostic test points for Horn Strobes and Strobes
- Common aesthetics across the L-Series platform
- Standard and compact sizes
- Tamper-resistant construction
- Field-selectable candela settings on wall units: 15, 30, 75, 95, 110, 135, and 185
- Field-selectable candela settings on ceiling units: 15, 30, 75, 95, 115, 150, and 177
- Rotary switches for candela, tone and volume selections
- Mounting plate provides plug-in design for easier installation and shorting springs to check wiring continuity
- Electrically compatible with legacy SpectrAlert, SpectrAlert Advance and L-series devices
- Synchronization through use of UL approved power supplies that support System Sensor Sync protocol or System Sensor MDL3 Sync Module
- Horns, Strobes and Horn Strobes listed for wall or ceiling use

Agency Listings

SIGNALING c UL us LISTED	SIGNALING UL LISTED	ULC LISTED	FM APPROVED	
Horn Strobes and Strobes: S5512, S4011	Horns: S4011	Horns: S4011	3057072 FM23FPUS0195	7300-1653:0525 7135-1653:0503 7135-1653:0526

The System Sensor L-Series and L-Series with LED platform offers the most versatile and easy-to-use line of horns, strobes, and horn strobes in the industry with lower current draw and modern aesthetics. LED lighting technology offers significantly lower current draw compared to older Xenon bulbs across a full candela range. This improves design flexibility for notification appliance circuits (NACs) while also reducing power supply requirements allowing for simpler and lower cost installations.

Flexible design options meet virtually any application requirement: wall or ceiling mount, standard or compact sizes, red or white color choices, bezel kits for alternate markings and languages, and LED color lenses for distinctive visual signaling. In addition, installers can easily adapt devices using field selectable candela, tone and volume settings using rotary switches.

The L-Series and L-Series with LED line is developed to simplify installation. All devices feature plug-in designs with minimal intrusion into the back box, making installations fast and foolproof while virtually eliminating costly and time-consuming ground faults. The universal mounting plate includes an onboard shorting spring, so installers can test wiring continuity before the device is installed.

In addition, the System Sensor L-Series with LED notification appliances offer a new diagnostic test point feature that allows you to measure device voltage with a digital voltage meter (DVM) without removing the appliance from the wall or ceiling. The DVM test points are discreetly located on the face of the notification appliance which enable faster troubleshooting and end of line (EOL) voltage checks while greatly reducing the risk of misplacing or damaging appliances during troubleshooting.

L-Series and L-Series with LED Specifications

Physical/Electrical Specifications	
Standard Operating Temperature	32°F to 120°F (0°C to 49°C)
Humidity Range	10 to 93% non-condensing
Strobe Flash Rate	1 flash per second
Nominal Voltage, LED Strobes and Horn Strobes	Regulated 24 VDC
Nominal Voltage, Horns	Regulated 12 VDC or regulated 24 DC/FWR
Operating Voltage Range, LED Strobes and Horn Strobes	16 to 33 V (24 V nominal)
Operating Voltage Range, Horns	8 to 17.5 V (12 V nominal) or 16 to 33 V (24 V nominal)
Input Terminal Wire Gauge	12 to 18 AWG

UL/ULC Current Draw Data, Horn Tones, and Sound Output Data

UL/ULC Maxmimum Strobe Current Draw (mA)

	Candela Rating	16–33 Volts Wall	16–33 Volts Ceiling
Candela Range	15	18	18
	30	22	22
	75	70	70
	95	75	75
	110	85	—
	115	—	90
	135	105	—
	150	—	110
	177	—	115
	185	120	—

UL/ULC Maxmimum Horn Current Draw (mA RMS)

		8–17.5 Volts	16–33 Volts	
Sound Pattern	**dB**	**DC**	**DC**	**FWR**
Temporal	High	39	44	54
Temporal	Low	28	32	54
Non-Temporal	High	43	47	54
Non-Temporal	Low	29	32	54
3.1 KHz Temporal	High	39	41	54
3.1 KHz Temporal	Low	29	32	54
3.1 KHz Non-Temporal	High	42	43	54
3.1 KHz Non-Temporal	Low	28	29	54
Coded	High	43	47	54
3.1 KHz Coded	High	42	43	54

UL/ULC Maximum Horn Strobe Current Draw (mA) and Sound Output (dBA)

			Current Draw (mA RMS), Horn Strobe, Candela Range (15-185 cd)										Sound Output (dBA)
			16-33 Volts										16-33V
Switch Pos.	**Sound Pattern**	**Volume Setting**	**15cd**	**30cd**	**75cd**	**95cd**	**110cd WALL**	**115cd CEILING**	**135cd WALL**	**150cd CEILING**	**177cd CEILING**	**185cd WALL**	**DC**
1	Temporal 3	High	35	38	87	92	94	120	189	189	190	190	87
2	Temporal 3	Low	35	38	87	92	94	120	135	135	145	145	79
3	Non-Temporal	High	50	52	87	92	94	120	127	127	135	135	87
4	Non-Temporal	Low	35	38	87	92	94	120	125	125	130	130	79
5	3.1KHz Temporal 3	High	35	38	87	89	91	115	155	155	165	165	86
6	3.1KHz Temporal 3	Low	35	38	87	89	91	115	128	130	135	135	80
7	3.1KHz Non-Temporal	High	40	42	87	89	91	115	125	125	135	135	86
8	3.1KHz Non-Temporal	Low	35	38	87	89	91	115	120	120	130	130	80

L-Series with LED Dimensions: Wall-Mounted Equipment

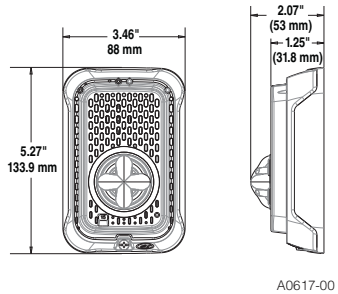

Compact Strobe, Horn Strobe for Wall

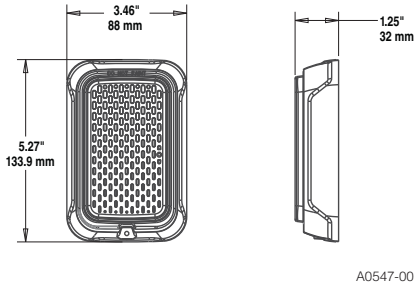

Compact Horn

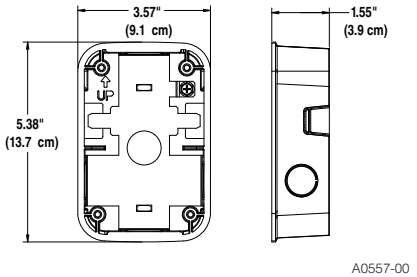

Compact Surface Mount Back Box for Walls (SBBGRL, SBBGWL)

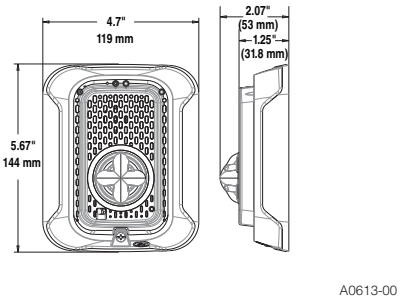

Strobes, Horn Strobes for Walls

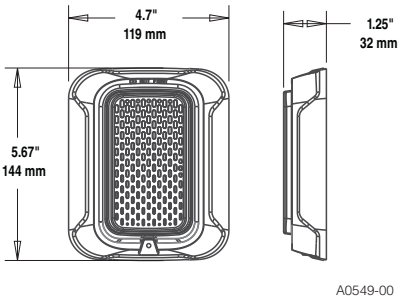

Horn

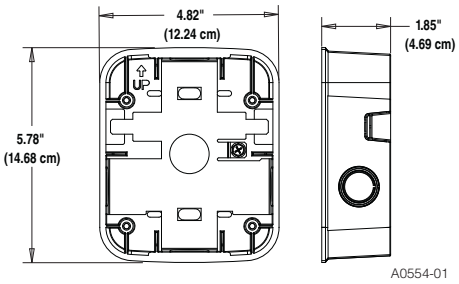

Surface Mount Back Box for Walls (SBBRL/SBBWL)

L-Series with LED Dimensions: Ceiling-Mounted Equipment

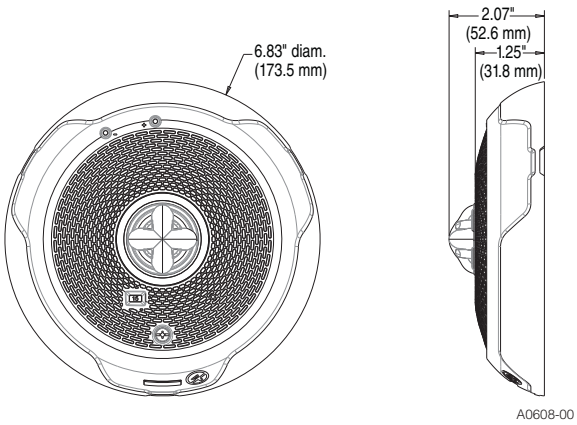

Strobes and Horn Strobes for Ceilings

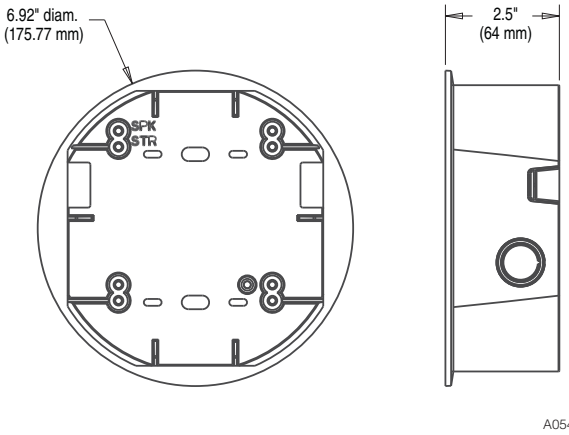

Surface Mount Back Box for Ceilings (SBBCRL, SBCWL)

L-Series with LED: Ordering Information

Model	Description
L-Series with LED Horn Strobes	
P2RLED	2-Wire, Horn Strobe, Wall, Red
P2RLED-B	2-Wire, Horn Strobe, Wall, Red, Bilingual
P2WLED	2-Wire, Horn Strobe, Wall, White
P2WLED-B	2-Wire, Horn Strobe, Wall, White, Bilingual
P2GRLED	2-Wire, Compact Horn Strobe, Wall, Red
P2GRLED-B	2-Wire, Compact Horn Strobe, Wall, Red, Bilingual
P2GWLED	2-Wire, Compact Horn Strobe, Wall, White
P2GWLED-B	2-Wire, Compact Horn Strobe, Wall, White, Bilingual
P2RLED-P	2-Wire, Horn Strobe, Wall, Red, Plain
P2WLED-P	2-Wire, Horn Strobe, Wall, White, Plain
P2RLED-SP	2-Wire, Horn Strobe, Wall, Red, FUEGO
P2WLED-SP	2-Wire, Horn Strobe, Wall, White, FUEGO
PC2RLED	2-Wire, Horn Strobe, Ceiling, Red
PC2RLED-B	2-Wire, Horn Strobe, Ceiling, Red, Bilingual
PC2WLED	2-Wire, Horn Strobe, Ceiling, White
PC2WLED-B	2-Wire, Horn Strobe, Ceiling, White, Bilingual
L-Series with LED Strobes	
SRLED	Strobe, Wall, Red
SRLED-B	Strobe, Wall, Red, Bilingual
SWLED	Strobe, Wall, White
SWLED-B	Strobe, Wall, White, Bilingual
SGRLED	Strobe, Compact, Wall, Red
SGRLED-B	Strobe, Compact, Wall, Red, Bilingual
SGWLED	Strobe, Compact, Wall, White
SGWLED-B	Strobe, Compact, Wall, White, Bilingual
SRLED-P	Strobe, Wall, Red, Plain
SWLED-P	Strobe, Wall, White, Plain
SRLED-SP	Strobe, Wall, Red, FUEGO
SWLED-CLR-ALERT	Strobe, Wall, White, ALERT
SWLED-ALERT	Strobe, Wall, White, ALERT, Amber Lens
SCRLED	Strobe, Ceiling, Red
SCRLED-B	Strobe, Ceiling, Red, Bilingual
SCRLED-P	Strobe, Ceiling, White, Plain
SCWLED	Strobe, Ceiling, White
SCWLED-B	Strobe, Ceiling, White, Bilingual
SCWLED-P	Strobe, Ceiling, White, Plain
SCWLED-CLR-ALERT	Strobe, Ceiling, White, ALERT
L-Series Horns	
HRL*	Horn, Red
HRLA*	Horn, Red, Plain, ULC
HWL*	Horn, White
HWLA*	Horn, White, Plain, ULC
HGRL*	Compact Horn, Red
HGRLA*	Compact Horn, Red, Plain, ULC
HGWL*	Compact Horn, White
HGWLA*	Compact Horn, White, Plain, ULC

Model	Description
LED Lenses	
LENS-A3	Lens LED Amber Wall/Ceiling
LENS-B3	Lens LED Blue Wall/Ceiling
LENS-G3	Lens LED Green Wall/Ceiling
LENS-R3	Lens LED Red Wall/Ceiling
Accessories	
TR-2	Universal Wall Trim Ring Red
TR-2W	Universal Wall Trim Ring White
SBBRL	Wall Surface Mount Back Box, Red
SBBWL	Wall Surface Mount Back Box, White
SBBGRL	Compact Wall Surface Mount Back Box, Red
SBBGWL	Compact Wall Surface Mount Back Box, White
TRC-2	Universal Ceiling Trim Ring, Red
TRC-2W	Universal Ceiling Trim Ring, White
SBBCRL	Ceiling Surface Mount Back Box, Red
SBBCWL	Ceiling Surface Mount Back Box, White
Bezels†	
BZR	Wall Red Bezel Kit
BZW	Wall White Bezel Kit
BZGR	Compact Wall Red Bezel Kit
BZGW	Compact Wall White Bezel Kit
BZRC	Horn Strobe Ceiling Red Bezel Kit
BZWC	Horn Strobe Ceiling White Bezel Kit

Notes for L-Series With LED Horn Strobes and Strobes:

All -P models have a plain housing (no “FIRE” marking on cover).
All -SP models have “FUEGO” marking on cover.
All -ALERT models have “ALERT” marking on cover.
All -B models have “FIRE/FEU” marking on cover for use in Canadian applications.
Amber lenses are not for use in Canadian applications

Notes for L-Series Horns:

*Horn-only models are listed for wall or ceiling use.

Notes for Bezels:

†Each bezel pack ships in a package of 5.
Add one of the following extensions for print/language options: -F (FIRE), -AL (ALERT), -EV (EVAC), -AG (AGENT), -P (Plain), -FR (FEU), -PG (FOGO), -SP (FUEGO), -SPE (FUEGO/FIRE).

3825 Ohio Avenue • St. Charles, IL 60174 USA
Phone: 800-SENSOR2 • Fax: 630-377-6495
www.systemsensor.com

3333 Unity Drive, Mississauga, ON L5L 3S6 Canada
Phone: 800-SENSOR2 • Fax: 905-812-0771
www.systemsensor.ca

System Sensor® is a registered trademark of Honeywell International, Inc.

©2023 System Sensor.
Product specifications subject to change without notice. Visit systemsensor.com for current product information, including the latest version of this data sheet.
AVDS916-01 • 10/03/2023